AW26/2

U TYPE DOUBLE FLANGE BUTTERFLY VALVE

DN350 - DN1800 (EPDM)

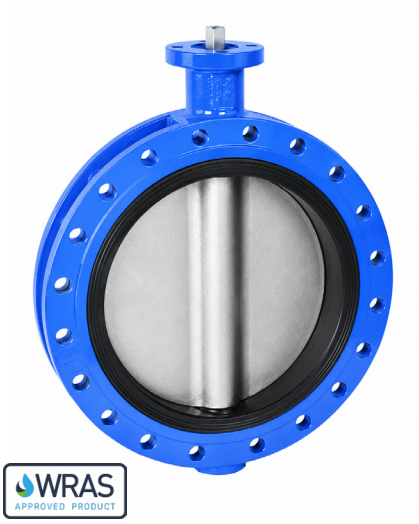

The Flanged Butterfly Valve has been developed in consultation with end users and large utilities to provide an advanced seal tight valve.

Application:

District heating & cooling, Irrigation, Potable water

Design features

- High-grade materials for fully rated construction
- Bonded liner in EPDM fully isolates body and stem from the process fluid
- O-ring molded in the liner eliminates the need for flange gasket
- Bonded liner provides primary seals for top and bottom shaft sealing

Technical Details

Face to Face in accordance to: DIN 3202-1 (EN 558-1 Series 13)	**Certification:** WRAS
Maximum Working Pressure PFA: 16 bar / PN16	**Connector type:** Accordance to EN ISO 5211
Working temperature: EN 593 (DIN 3354)	**Coating:** 300 µm FBE coating, external and internal
Flange Type: EN 1092-2 PN10 & PN16	**Application:** Installation for water, potable water, irrigation water, district cooling and chilled water and other chemically inert fluids for flow closing

© Aeon 2026 Rev.1

Product design and specifications may change without notice. For more information on Aeon products, please contact our Sales team.

No	Part Name	Material
1	Body	Ductile Iron EN-GJS-500-7
2	Bushing	Teflon PTFE
3	Seat	Elastomer EPDM
4	Shaft	Stainless Steel X20Cr13 / 1.4021 / 420
5	Disc	Stainless Steel X5CrNiMo17-12-2 / 1.4401 / 316
6	O-ring Seal	Elastomer NBR
7	Bolt	Stainless Steel X5CrNiMo17-12-2 / 1.4401 / 316

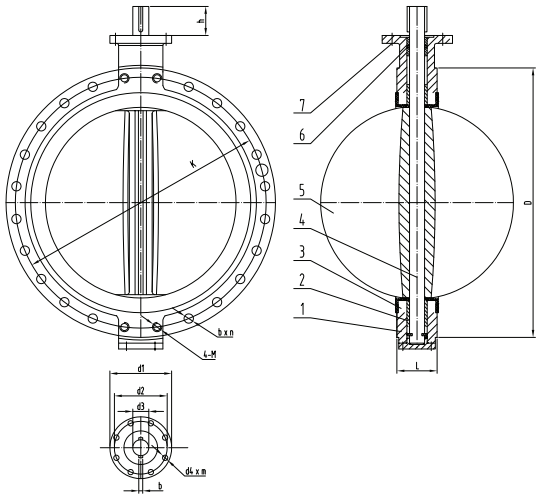

Dimension (mm & kg)

DN		350	400	450	500	600	700	800	900	1000	1100	1200	1400	1800
AW26/2	PN10	BB0991	BB0992	BB0993	BB0994	BB0995	BB0996	BB0997	BB0998	BB0999	BB1000	BB1001	BB0930	BB0931
	PN16	BB0980	BB0981	BB0982	BB0983	BB0984	BB0985	BB0986	BB0987	BB0988	BB0989	BB0990	BB0928	BB0929
L		78	102	114	127	154	165	190	203	216	251	254	276	356
h		45	51	51	64	70	66	66	118	142	142	150	200	250
D PN16/ PN10		520 / 505	580 / 565	640 / 615	715 / 670	840 / 780	910 / 895	1025 / 1015	1125 / 1115	1255 / 1230	1355 / 1340	1485 / 1455	1685 / 1675	2130 / 2115
K PN16/ PN10		470 / 460	525 / 515"	585 / 565	650 / 620	770 / 725	840	950	1050	1170 / 1160	1270	1390 / 1380	1590	2020
b x n PN16 / PN10		27×16 / 23×16	30×16 / 27×16	30×20 / 27×20	33×20 / 27×20	36×20 / 30×20	36×24 / 30×24	39×24 / 33×24	39×28 / 33×24	42×28 / 36×28	42×32 / 36×32	48×32 / 39×32	49×36 / 43×36	56×44 / 50×44
d1		125	175	175	175	210	300	300	300	300	300	350	415	475
d2		102	140	140	140	165	254	254	254	254	254	290	356	406
d4 x m		12×4	18×4	18×4	18×4	22×4	18×8	18×8	18×8	18×8	18×8	22×8	33×8	39×8
□ S		22	24	27	27	36	46	46	55	55	55	55	90	110
ISO 5211		F10	F14	F14	F14	F16	F25	F25	F25	F25	F25	F30	F35	F40
Closing torque [Nm]PN16/PN10		750 / 675	1400 / 1260	1600 / 1440	2000 / 1800	2500 / 2250	4000 / 3600	5000 / 4500	6000 / 5400	11000 / 9900	17500 / 16100	18000 / 16200	40000/ 33000	85000/ 46200
MAST [Nm] PN16/PN10		-	-	-	-	-	-	-	-	-	-	-	85000/ 63000	119000/ 88200

© Aeon 2026 Rev.1

Product design and specifications may change without notice. For more information on Aeon products, please contact our Sales team.