AG04

RESILIENT SEATED GATE VALVE, TYPE A WITH VENT PLUG

BS, DN50-DN300

H_2 READY



Patented dual seal technology, the optimal Resilient Seated Gate Valve provides perfect seal tightness with low torque, minimal number of turns, and full traceability.

Application:

Gas & Biogas and Natural gas lines at medium working pressure and temperature range from -20° to +60°C

Design features

- Patented double seated integral ductile iron wedge, fully NBR encapsulated
- Very low closing torque with perfectly smooth patented guiding
- Two stem seals fully replaceable under pressure
- Patented primary seal integrated in the wedge to achieve perfect top seal when valve is opened.

Technical Details

Face to Face in accordance to: BS 5163 (EN 558-1 Series 3)	**Certification:** BSI Kitemark, CE (PED 2014/68/EU)
Maximum Operating Pressure MOP: 7 bar for double-block-and-bleed	**Bonnet Top:** EN 558-1 Series 14
Working temperature: -20 to +60°C	**Face to Face in accordance to:** Complies to GW 336 (adaptation of extension spindle)
Construction complies to: GIS/V7-1 Class A/B, EN 13774 Class 1/2	**Coating:** 250 µm FBE coating, external and internal
Flange Type: ANSI B16.5 150#RF	**Marking:** Full traceability with QR code

© Aeon 2026 Rev.1

Product design and specifications may change without notice. For more information on Aeon products, please contact our Sales team.

AG04

No	Part Name	Material
1	Body	Ductile Iron EN-GJS-500-7
2	Bonnet	Ductile Iron EN-GJS-500-7
3	Wedge	D.I., NBR encapsulated EN-GJS-500-7
4	Wedge Nut	H.T. dezincification resistant Brass
5	Guide Shoe	Plastic
6	Stem	Stainless Steel X20Cr13 / 1.4021 / 420
7	Gland Bush	H.T. dezincification resistant Brass
8	Bonnet Gasket	Elastomer NBR
9	O-ring Seal	Elastomer NBR
10	Dust Seal	Elastomer NBR
11	Bonnet Screws	Stainless Steel A2-70
12	Bottom Washer	Plastic POM
13	Acetal Circlip	Plastic
14	Vent Plug	Stainless Steel X20Cr13 / 1.4021 / 420

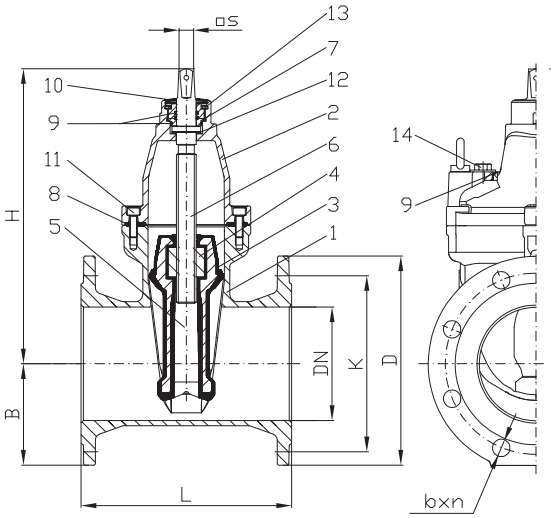

Notes:
- Lifting eye-bolts standard from DN125

Dimension (mm & kg)

DN		50	80	100	150	200	250	300
AG04 - BS	ANSI	AG0002	AG0003	AG0004	AG0006	AG0008	AG0010	AG0012
L		178	203	229	267	292	330	356
H		250	280	300	350	400	450	500
B		75	95	102	134	165	196	225
K		120,7	152,4	190,5	241,3	298,4	362	431,8
b x n		19×4	19×8	19×8	22,3×8	22,3×8	25,4×12	25,4×12
D		152,4	190,5	228,6	279,4	342,9	406,4	482,6
Stem Top Square		19,3	19,3	19,3	19,3	24,3	27,3	27,3
Turns to open/close		9 ¾	11 ½	14 ¼	20 ¼	18	21 ¾	26 ½
Weight kg		13,5	18,6	27,8	43,5	73,3	88,5	160
Kv [m3/h]		198	654	1252	2818	5601	8751	12602

Notes:
- Clockwise to close

© Aeon 2026 Rev.1

Product design and specifications may change without notice. For more information on Aeon products, please contact our Sales team.