AG03

# RESILIENT SEATED GATE VALVE, TYPE A WITH VENT PLUG

## BS, DN50 - DN300

$H_2$ READY



Patented dual seal technology, the optimal Resilient Seated Gate Valve provides perfect seal tightness with low torque, minimal number of turns, and full traceability.

## Application:

Gas & Biogas and Natural gas lines at medium working pressure and temperature range from -20° to +60°C

## Design features

- Patented double seated integral ductile iron wedge, fully NBR encapsulated
- Very low closing torque with perfectly smooth patented guiding
- Two stem seals fully replaceable under pressure
- Patented primary seal integrated in the wedge to achieve perfect top seal when valve is opened.

## Technical Details

| | |
|---|---|
| **Face to Face in accordance to:**<br>BS 5163 (EN 558-1 Series 3) | **Certification:**<br>BSI Kitemark, CE (PED 97/23/EC), DVGW |
| **Maximum Operating Pressure MOP:**<br>7 bar for double-block-and-bleed | **Bonnet Top:**<br>Complies to GW 336 (adaptation of extension spindle) |
| **Working temperature:**<br>-20 to +60°C | **Face to Face in accordance to:**<br>Complies to GW 336 (adaptation of extension spindle) |
| **Construction complies to:**<br>GIS/V7-1 Class A/B, EN 13774 Class 1/2 | **Coating:**<br>250 µm FBE coating, external and internal |
| **Flange Type:**<br>EN 1092-2 PN16 | **Marking:**<br>Full traceability with QR code |



© Aeon 2026 Rev.1

Product design and specifications may change without notice. For more information on Aeon products, please contact our Sales team.

AG03

| No | Part Name | Material |
|---|---|---|
| 1 | Body | Ductile Iron EN-GJS-500-7 |
| 2 | Bonnet | Ductile Iron EN-GJS-500-7 |
| 3 | Wedge | D.I., NBR encapsulated EN-GJS-500-7 |
| 4 | Wedge Nut | H.T. dezincification resistant Brass |
| 5 | Guide Shoe | Plastic |
| 6 | Stem | Stainless Steel X20Cr13 / 1.4021 / 420 |
| 7 | Gland Bush | H.T. dezincification resistant Brass |
| 8 | Bonnet Gasket | Elastomer NBR |
| 9 | O-ring Seal | Elastomer NBR |
| 10 | Dust Seal | Elastomer NBR |
| 11 | Bonnet Screws | Stainless Steel A2-70 |
| 12 | Bottom Washer | Plastic POM |
| 13 | Acetal Circlip | Plastic |
| 14 | Vent Plug | Stainless Steel X20Cr13 / 1.4021 / 420 |
| 15 | Cap-Top | Ductile Iron EN-GJS-500-7 |

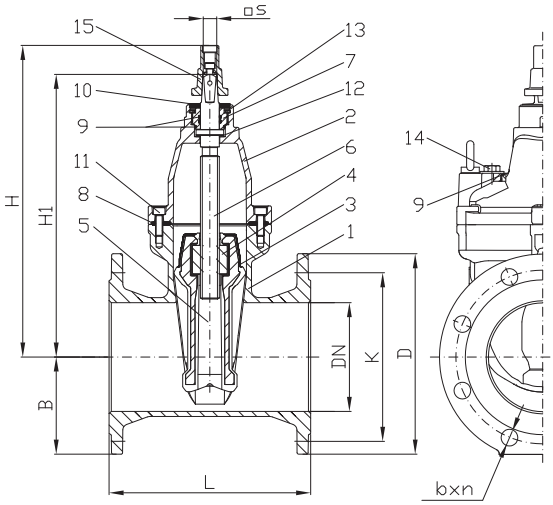


Notes:
- Lifting eye-bolts standard from DN150
- Stem in high chrome X5CrNiMo-17-12-2 / 1.4401 available on request

## Dimension (mm & kg)

| DN | | 50 | 80 | 100 | 125 | 150 | 200 | 250 | 300 |
|---|---|---|---|---|---|---|---|---|---|
| AG03 - BS | PN16 | AG0507 | AG0807 | AG1007 | AG1257 | AG1507 | AG2007 | AG2507 | AG3007 |
| L | | 178 | 203 | 229 | 254 | 267 | 292 | 330 | 356 |
| H1 | | 254 | 265 | 299 | 402 | 390 | 490 | 562 | 642 |
| H | | 303 | 308 | 342 | 446 | 435 | 563 | 635 | 715 |
| B | | 75 | 95 | 102 | 120 | 134 | 165 | 196 | 225 |
| K | | 125 | 160 | 180 | 210 | 240 | 295 | 355 | 410 |
| b x n | | 19×4 | 19×8 | 19×8 | 19×8 | 23×8 | 23×12 | 28×12 | 28×12 |
| D | | 165 | 200 | 220 | 250 | 285 | 340 | 405 | 460 |
| Stem Top Square □ S | | 14,3 | 17,3 | 19,3 | 19,3 | 19,3 | 24,3 | 27,3 | 27,3 |
| Turns to open/close | | 9 ¾ | 11 ½ | 14 ¼ | 20 ¼ | 20 ¼ | 18 | 21 ¾ | 26 ⅓ |
| Weight kg | | 14,7 | 18,6 | 21,6 | 37,6 | 39,3 | 65,3 | 88,6 | 137 |
| Kv [m3/h] | | 198 | 654 | 1252 | 1957 | 2818 | 5601 | 8751 | 12602 |

Notes:
- Clockwise to close

© Aeon 2026 Rev.1

Product design and specifications may change without notice. For more information on Aeon products, please contact our Sales team.