BG12

RESILIENT SEATED GATE VALVE WITH VENT PLUG

BS, DN400

H_2 READY



The Aeon valve gives 100% leak tight performances at low closing torques and is therefore ideally suited for the gas application.

Application:

Gas & Biogas and Natural gas lines at medium working pressure and temperature range from -20° to +60°C

Design features

- Fully NBR encapsulated ductile iron wedge
- Stem packing with three O-Rings, one primary O-Ring seal and one dust seal
- Heavy-duty ductile iron construction with stainless steel 13% Cr stem, brass wedge nut and collar
- Pressure point / by-pass bosses cast onto the valve as standard. These can be drilled and plugged at our factory if required (BP).

Technical Details

Face to Face in accordance to: BS 5163 (EN 558-1 Series 3)	**Certification:** BSI Kitemark, CE (PED 2014/68/EU)
Maximum Operating Pressure MOP: 3 bar / PN3	**Flange Type:** EN 1092-2 PN16 ANSI B16.5 150#RF
Working temperature: -20 to +60°C	**Coating:** 250 µm FBE coating, external and internal
Construction complies to: GIS/V7-1 Class A/B, EN 13774 Class 1/2	

© Aeon 2026 Rev.1

Product design and specifications may change without notice. For more information on Aeon products, please contact our Sales team.

BG12

No	Part Name	Material
1	Body	Ductile Iron EN-GJS-500-7
2	Bonnet	Ductile Iron EN-GJS-500-7
3	Gland Housing	Ductile Iron EN-GJS-500-7
4	Wedge	D.I., NBR encapsulated EN-GJS-500-7
5	Wedge Nut	H.T. dezincification resistant Brass
6	Stem	Stainless Steel 420/431/316
7	Gland Bush	H.T. dezincification resistant Brass
8	Rolling Bearing	Component
9	Bonnet Gasket	Elastomer NBR
10	O-ring Seal	Elastomer NBR
11	Gasket	Elastomer NBR
12	Dust Seal	Elastomer NBR
13	Bonnet Screws	Stainless Steel A2-70
14	Housing Bolts	Stainless Steel A2-70
15	Vent Plug	Stainless Steel X20Cr13 / 1.4021 / 420

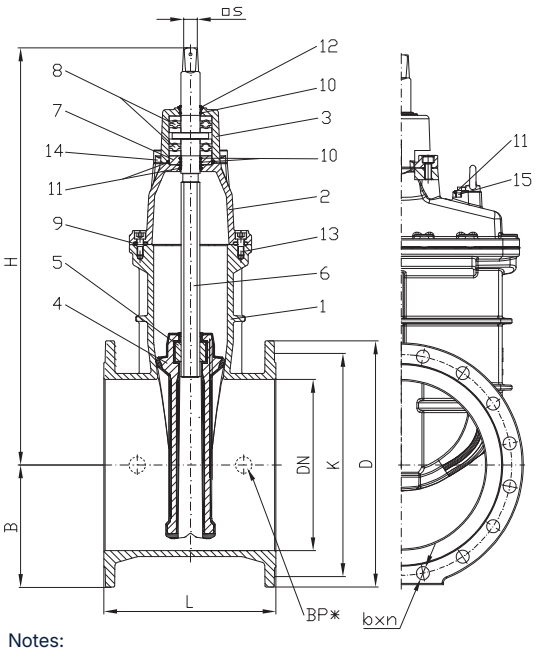

Notes:
- Lifting eye-bolts for transport is standard
- Pressure point/by-pass bosses cast onto the valve as standard. These can be drilled and plug at our factory if required (BP)

Dimension (mm & kg)

DN		400
BG12	PN16	BG4007
	ANSI	BG4010
L		406
H		975
B		285
K EN 1092-2/ANSI B16.5		525 / 539,7
b x n EN 1092-2/ANSI B16.5		31×16 /28,6×16
D EN 1092-2/ANSI B16.5		595
Stem Top Square		32
Turns to open/close		34 ½ ± ½
Weight kg		295,7

© Aeon 2026 Rev.1

Product design and specifications may change without notice. For more information on Aeon products, please contact our Sales team.