BG012

RESILIENT SEATED GATE VALVE

H2 READY



BS, DN350 - DN400

The Aeon valve gives 100% leak tight performances at low closing torques and is therefore ideally suited for the gas application.

Application:

Gas & Biogas and Natural gas lines at medium working pressure and temperature range from -20° to +60°C

Design features

- Fully NBR encapsulated ductile iron wedge
- Stem packing with three O-Rings, one primary O-Ring seal and one dust seal
- Heavy duty ductile iron construction with stainless steel 13% Cr stem. Brass wedge nut and collar.

Technical Details

Face to Face in accordance to: BS 5163 (EN 558-1 Series 3)	**Construction complies to:** EN 13774 Class 1/2
Maximum Operating Pressure MOP: 7 bar for double-block-and-bleed	**Flange Type:** EN 1092-2 PN16
Working temperature: -20 to +60°C	**Coating:** 250 µm FBE coating, external and internal

© Aeon 2026 Rev.1

Product design and specifications may change without notice. For more information on Aeon products, please contact our Sales team.

BG012

No	Part Name	Material
1	Body	Ductile Iron EN-GJS-500-7
2	Bonnet	Ductile Iron EN-GJS-500-7
3	Gland Housing	Ductile Iron EN-GJS-500-7
4	Wedge	D.I. NBR encapsulated EN-GJS-500-7
5	Wedge Nut	H.T. dezincification resistant Brass
6	Stem	Stainless Steel 420/431/316
7	Gland Bush	H.T. dezincification resistant Brass
8	Thrust Bearing	Component
9	Bonnet Gasket	Elastomer NBR
10	O-ring Seal	Elastomer NBR
11	Gasket	Elastomer NBR
12	Dust Seal	Elastomer NBR
13	Bonnet Screws	Stainless Steel A2-70
14	Housing Bolts	Stainless Steel A2-70
15	Vent Plug	Stainless Steel X20Cr13 / 1.4021 / 420

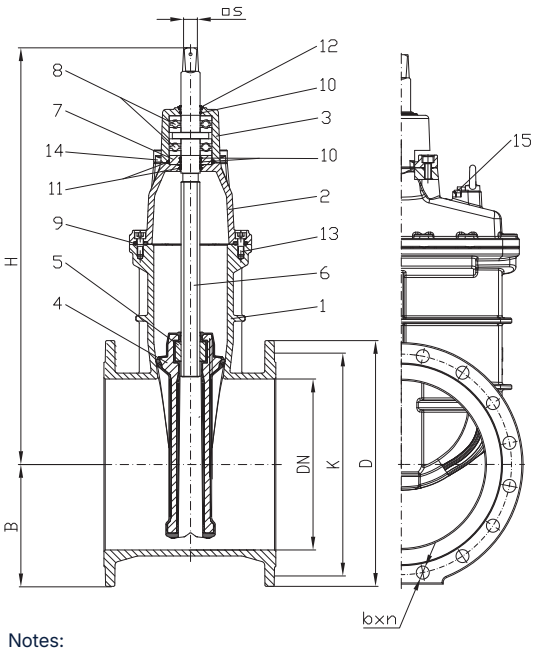

Notes:
- Lifting eye-bolts for transport is standard

Dimension (mm & kg)

DN		350	400
BG12	PN16	BG3507	BG4007
L		381	406
H		1000	975
B		255	285
K PN16		470	525
b x n PN16 / PN10		28×16	31×16
D		520	580
Stem Top Square		32	32
Turns to open/close		34	34
Weight kg		282	295,7

© Aeon 2026 Rev.1

Product design and specifications may change without notice. For more information on Aeon products, please contact our Sales team.