BG03

RESILIENT SEATED GATE VALVE, TYPE B WITH PE-TAILS

DN400 - Steel Gate Valve with PE ends

H_2 READY

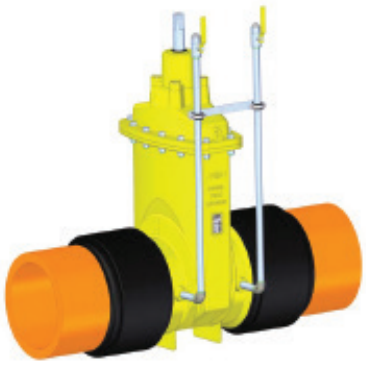

The Type B Resilient Seated Gate Valve with higher standard of performance has been developed on the basis of years of experience to ensure tightness and high durability.

Application:

Gas & Biogas and Natural gas lines at medium working pressure and temperature range from -20° to +60°C

Design features

- PE tails ends for fusing into PE pipe system
- Patented double seated integral ductile iron wedge, fully NBR encapsulated
- Very low closing torque with perfectly smooth patented guiding
- Three stem seals fully replaceable under pressure
- Patented primary seal integrated in the wedge to achieve perfect top seal when valve is opened
- Full bore
- The valve is equipped with a bypass outlet as standard.

Technical Details

Maximum Operating Pressure MOP: 10 bar	**Construction complies to:** GIS/V7-1 Class A/B, EN 13774 Class 1/2
Design temperature: Cast steel valve -20 to +85°C PE pipe -20 to +60°C	**Marking:** Full traceability with QR code
Coating: Epoxy: 250 µm FBE coating, external and internal PUR: Internally - 250 µm FBE coating Externally - polyurethan (PUR) to EN 10290	

© Aeon 2026 Rev.1

Product design and specifications may change without notice. For more information on Aeon products, please contact our Sales team.

No	Part Name	Material
1	Body	Cast Steel GP240GH / GS-C25N
2	Bonnet	Cast Steel GP240GH / GS-C25N
3	Gland Housing	Cast Steel GP240GH / GS-C25N
4	Wedge	D.I., NBR encapsulated EN-GJS-500-7
5	Wedge Nut	Aluminium Bronze
6	Stem	Stainless Steel X20Cr13 / 1.4021 / 420
7	Gland Bush	H.T. dezincification resistant Brass
8	Rolling Bearing	Component
9	Bonnet Gasket	Elastomer NBR
10	O-ring Seal	Elastomer NBR
11	Gasket	Elastomer NBR
12	Dust Seal	Elastomer NBR
13	Bonnet Screws	Stainless Steel A2-70
14	Housing Bolts	Stainless Steel A2-70
15	Washer	Stainless Steel A2-70
16	Nut	Stainless Steel A2-70
17	Vent Plug	Stainless Steel X20Cr13 / 1.4021 / 420
18	Sleeve	Steel
19	Shrink Hose	Plastic
20	Pipe	PE 100 gas pipes SDR11
21	Ball Valve	Steel
22	Steel Tube	Steel S235JRH
23	Steel Elbow	Steel S235JRH

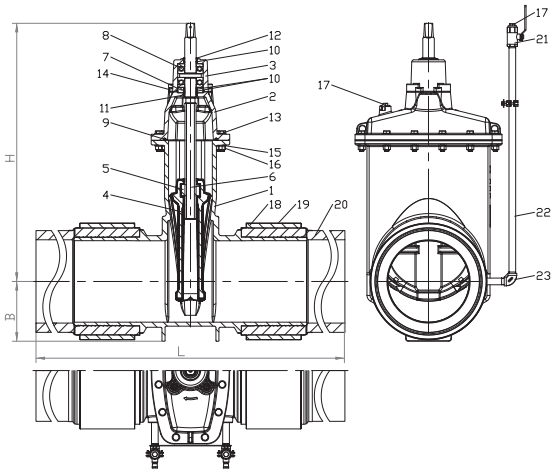

Notes:
- Length of PE pipe 1500 mm - on each side.

Dimension (mm & kg)

DN		400
BG03	PE	400
	PUR PN16	BG4022
L **		3916 ± 20
H		1015
B		235
Stem Top Square		32
Turns to open/close		34 ½ ± ½
Weight kg		562

** Length may be different

© Aeon 2026 Rev.1

Product design and specifications may change without notice. For more information on Aeon products, please contact our Sales team.