AG05/06

RESILIENT SEATED GATE VALVE, TYPE A WITH STEEL ENDS

DN50 - DN300

H_2 READY



Patented dual seal technology, the optimal Resilient Seated Gate Valve provides perfect seal tightness with low torque, minimal number of turns, and full traceability.

Application:

Gas & Biogas and Natural gas lines at medium working pressure and temperature range from -20° to +60°C

Design features

- Steel ends for welding into steel pipe system
- Patented double-seated integral ductile iron wedge, fully NBR encapsulated
- Very low closing torque with perfectly smooth patented guiding
- Two stem seals, fully replaceable under pressure
- Patented primary seal integrated into the wedge to achieve a perfect top seal when the valve is opened.

Technical Details

Maximum Operating Pressure MOP: 16 bar / PN16 (7 bar for double-block-and-bleed - optional)	**Certification:** CE (PED 2014/68/EU), BSI Kitemark, DVGW, Russian Certificate of Conformity
Design temperature: -20 to +60°C	**Marking:** Full traceability with QR code
Construction complies to: EN 13774 Class 1/2	**Coating:** Epoxy: 250 µm FBE coating, external and internal PUR available on request: Internally - 250 µm FBE coating Externally - polyurethane (PUR) to EN 10290
Bonnet Top: Complies to GW 336 (adaptation of extension spindle)	

© Aeon 2026 Rev.1

Product design and specifications may change without notice. For more information on Aeon products, please contact our Sales team.

No	Part Name	Material
1	Body	Cast Steel GS-C25N
2	Bonnet	Ductile Iron EN-GJS-500-7
3	Wedge	D.I., NBR encapsulated EN-GJS-500-7
4	Wedge Nut	H.T. dezincification resistant Brass
5	Guide Shoe	Plastic POM
6	Stem	Stainless Steel X20Cr13 / 1.4021 / 420
7	Gland Bush	H.T. dezincification resistant Brass
8	Bonnet Gasket	Elastomer NBR
9	O-ring Seal	Elastomer NBR
10	Dust Seal	Elastomer NBR
11	Bonnet Screws	Stainless Steel A2-70
12	Bottom Washer	Plastic POM
13	Acetal Circlip	Plastic POM
14	Steel Connector	Steel pipe P265GH

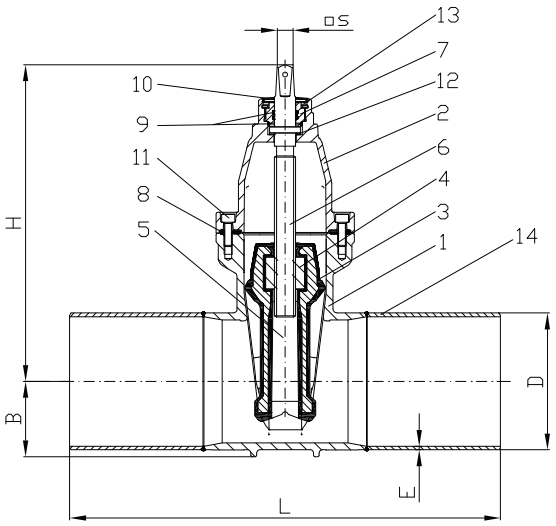

Notes:
- Lifting eye-bolts standard from DN150
- DN50 has 2 stem seal and one primary seal

Dimension (mm & kg)

DN		50	80	100	150	200	250	300
AG05	EPOXY	AG0555	AG0855	AG1055	AG1555	AG2055	AG2555	AG3055
	PUR	AG0564	AG0864	AG1064	AG1564	AG2049	AG2549	AG3049
AG06**	EPOXY	AG0560	AG0860	AG1060	AG1560	AG2061	AG2561	AG3061
	PUR	AG0565	AG0865	AG1065	AG1565	AG2065	AG2565	AG3065
L*		570	550	520	530	570	590	620
H		255	270	300	390	490	562	642
B		37	50	63	90	120	145	170
AG05	D	60,3	88,9	114,3	168,3	219,1	273	323,9
	E	2,9	3,2	3,6	4,5	6,3	6,3	7,1
AG06**	D	57	89	108	159	219	273	325
	E	3,0	4,0	4,0	5,0	6,0	7,0	8,0
Stem Top Square		14,3	17,3	19,3	19,3	24,3	27,3	27,3
Turns to open/close		9 ¾	11 ½	14 ¼	20 ¼	18	21 ¾	26 ⅓
Weight kg		11,5	15,5	18,0	36,0	68,0	91,5	136,5

** Other lengths available on request

© Aeon 2026 Rev.1

Product design and specifications may change without notice. For more information on Aeon products, please contact our Sales team.