ECOTROL®

CONTROL VALVE

SERIES 8C/ 6N/ 6H:



Powerful valve actuator

Multifunctional positioner

Reliable stem seals

Sturdy precision valve trims

Fixed-shape housing seal

ABOUT THE ECOTROL® VIDEO

ARCA-VALVE.COM

ARCA VALVES

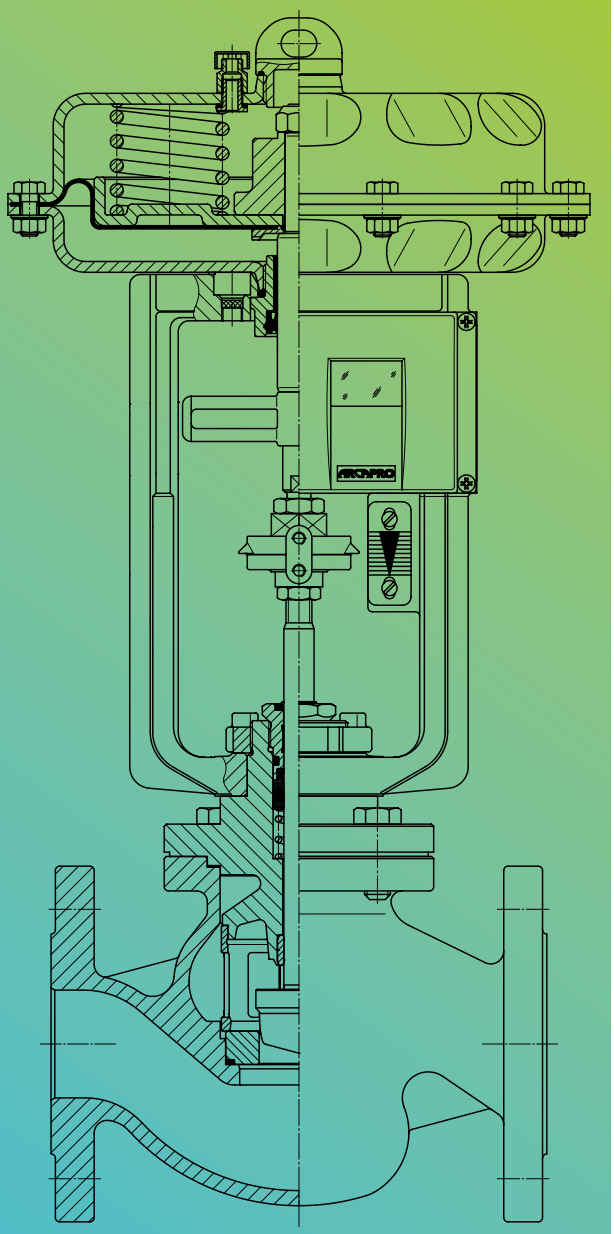

ARCA is a specialist in sophisticated industrial process control.

Our story began in 1917 with a groundbreaking innovation. Since then, outstanding engineering skills and pioneering spirit have been key strengths of our family-run company. Today our control technology provides reliable interfaces for your process.

Our comprehensive services guarantee the secure and efficient control of your production, from early project consulting to maintenance all the way to process optimization.

CONTROL THE FLOW

YOUR SOLUTION: OUR ECOTROL®-CONTROL VALVES

Powerful valve actuator

The product range of actuators is as diverse as the requirements in the plant. The series 812 pneumatic multi-spring actuator shown here is used as the standard actuator. It provides high sealing force and positioning accuracy for maximum control performance. The modularity of the actuator enables equipment options and flexibility for the operator. This actuator transcends boundaries and can be found in explosion protected environments or in coastal or off-shore regions. ECOTROL® control valves are also available with pneumatic actuators of the 811 and MA60 series, the durable piston actuators 812-DWK and 814, and of course with electric or electrohydraulic actuators. See the *ARCA Actuators brochure* for more details.

Multifunctional positioner

The digital positioner is the multifunctional interface for controllers or process control systems. For analog systems the self-adapting positioner type 826 ARCASMART is your first choice with its easy operation and intuitive user interface. Due to its versatile diagnostic and communication options, we recommend the 827 ARCAPRO® type for demanding applications. As a standard, it works with a 4–20 mA input signal. Among others, HART®, Profibus (PA) and Foundation Fieldbus (FF) can be used for bidirectional data exchange including status messages. It may be parameterized both on site and via the communications system. For the installation and mechanical coupling of all positioners to the actuator, the open concept according to VDI/VDE 3847, which we helped to shape, has prevailed. See the *ARCA Positioner brochure* for more details.

Reliable stem seals

Depending on the medium, pressure and temperature, we can recommend the most suitable stem seal – from the stuffing box (also certified according to TA-Luft or ISO 15848) up to the hermetically sealed bellows sealing. We take care that you don't have to worry about external leakage. The stem surfaces, the packaging material and the design are specially matched to one another, so that neither friction, corrosion nor emission limit values will be a problem to you.

Fixed-shape housing seal

The connection between housing and cover flange is located in the force bypass. This prevents installation errors and permits the full chambering of the housing seal. This prevents creeping of the housing seal. Also, this housing/cover design eliminates the transmission of transverse forces to the valve seat and plug, thus preventing internal leakage.

Sturdy precision valves trims

All valve trims working in the heart of the ECOTROL® control valves are designed exactly to the process conditions of your plant. Closure members and valve seats are optimized in shape and material to your requirements. The technical highlight is our unique rapid replacement system. Without special tools your maintenance personnel can replace the clamped valve seat. The metallic or soft seal of the valve seat and the floating mounted clamped seat ensure permanent inner tightness. The simple seat/plug geometry is also ideally suited for the use of hard metal or ceramics, the best choice for abrasive media.

The ECOTROL® system series stands for holistically conceived technology with unique service and maintenance convenience, low operating costs and low life cycle costs.

EXTREMELY SAFE, RELIABLE, EFFICIENT

The ECOTROL® globe control valve is flexible and almost maintenance free as an all-rounder in many processes and branches. The modular system provides tailor-made and thus ideal control solutions for steam, gas, oil and other fluid aggregate states. Various innovative design elements and a trim designed precisely for the flow conditions guarantee maximum efficiency, reliability and safety.

The patented ECOTROL®-clamping seat system enables extremely easy maintenance without special tools. This means that functionally relevant trims can be changed quickly and cost-effectively by your own maintenance personnel.

ARCAonsite allows you with a QR code nameplate on the control valve worldwide direct access to our digital platform. There you will find all the necessary information and the latest documentation for your valves.

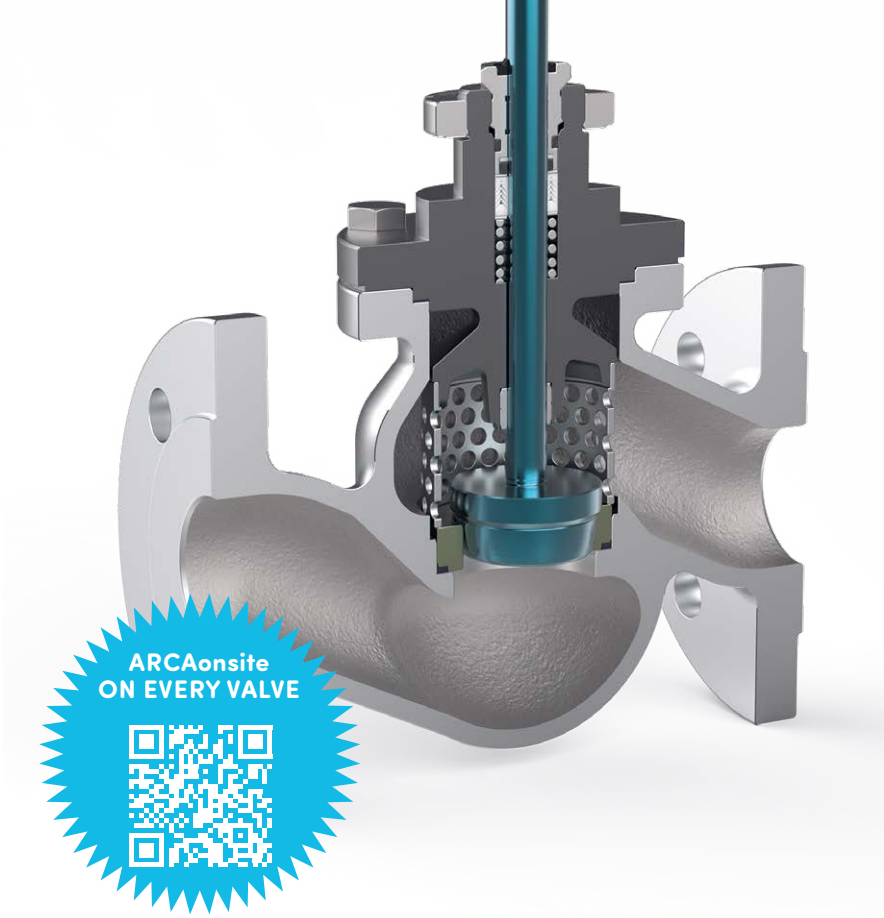

OUR INNOVATIONS	YOUR ADVANTAGES
1 Patented valve seat with PTFE soft seal and metallic secondary seal	→ Maximum inner leak tightness → Defined preload → Long lifetime
2 Clamped valve seat made of different materials	→ High inner leak tightness through self-centering → Low wear minimizes spare parts costs
3 PTFE V-ring packing with additional fine sealing element	→ Security up to hermetical leak tightness according to TA-Luft → Maintenance free
4 Rapid replacement system for seat and plug	→ Maintenance without special tools, especially service friendly
5 Valve trim optimized for all applications	→ Exactly adjustable → Maximum control performance → Low noise emissions
6 Valve plug and stem can be separately replaced without mechanical processing (Valves with bellows or low temperature extension)	→ Reduced storage → More cost-effective plug replacement
7 Flow-optimized valve housing	→ Low noise development
8 Compact and sturdy design	→ Small space requirements → Low weight

STEM SEAL

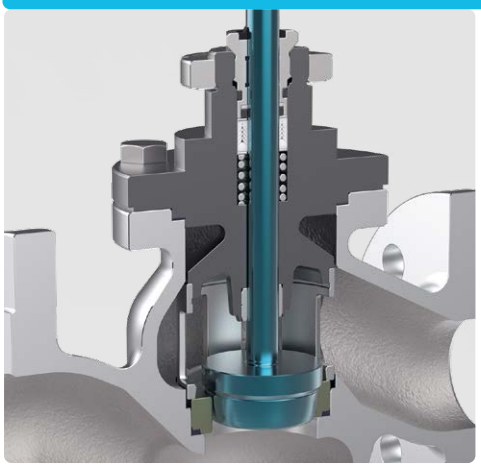

Low-maintenance PTFE V-ring packing with fine sealing element

This packing consists of graphite PTFE and pure PTFE V-rings. This makes them insensitive to fluctuating operating temperatures. The corrosion-resistant preloading spring arranged under the packing effects the self-adjustment of the stem sealing and ensures a sufficient sealing force even at low pressure. An elastomer fine sealing element is added as a backup sealing device to the stuffing box. A wiper ring protects against dirt from the outside. This version is also certified according to TA-Luft / ISO 15848 using a special PTFE compound for the temperature range from -46 °C to 200 °C.

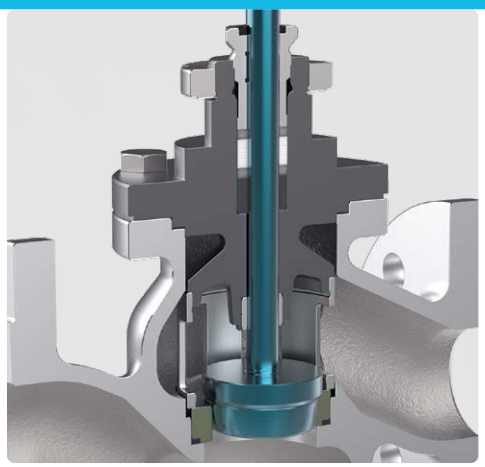

Stuffing box with packing rings

Various packing materials are available for the classic type of adjustable stem sealing. Decisive for high, long-lasting leak-tightness, however, is the uniform pressing of the individual packing rings or the cords. With the patented OPTIPRESS® preloading device, all rings of a packing are pressed with almost the same preload. The sealing effect is optimally distributed over the packing height.

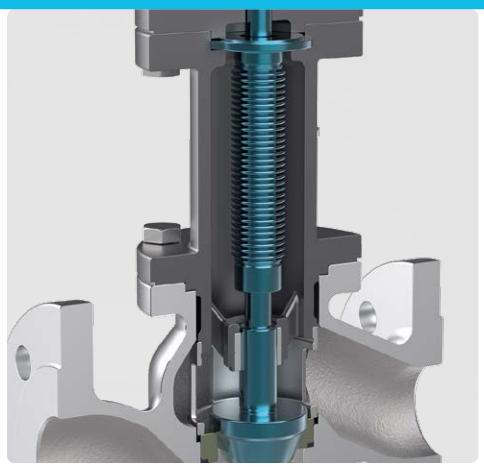

Bellows seal

If absolute hermetically sealing is required, our specially developed bellows seal is the first choice. The stainless steel metal bellows are welded pressure-tight at the bottom with the valve stem and at the top with the bellows plate. For safety reasons, an additional stuffing box with standard packing is provided. A control connection for alarm, flushing or extraction devices can optionally be provided between the metal bellows and the packing. Maximum operational reliability is thus ensured, even in the event of failure of the metal bellows. Due to optimized manufacturing processes the valve plug and bellows can be freely replaced without machining the pin bore on site.

TRIMS

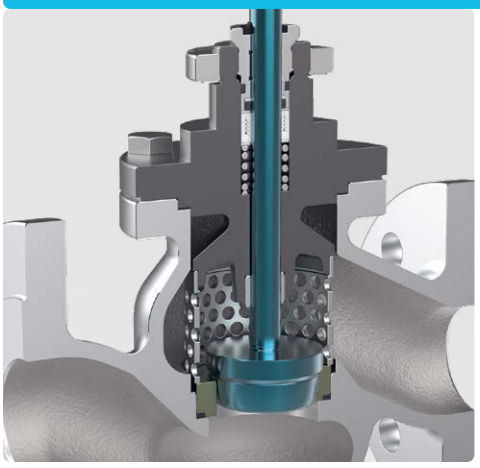

Standard parabolic plug

For laminar or turbulent flow, the single-stage, dirt-resistant parabolic plug is the best choice. In case of straight-way control valves without pressure compensation and up to nominal size DN 100 (4"), the plug and stem are one-piece; beyond that, the design is two-part. As standard, the characteristic curve of the parabolic plugs is selectable; the standard characteristic curves are linear and equal percentage. The valve is metal seated. In order to counteract the cavitation-related erosion phenomena occurring under high pressure conditions, parabolic plugs (single or multi-stage) and clamping seat can also be made of highly wear-resistant ceramic materials. Noise emissions can be reduced with a low-noise perforated cage.

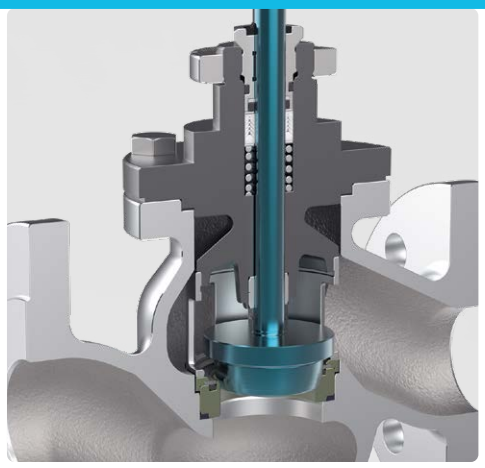

Soft seal with metallic support

In order to reliably ensure internal leak-tightness even with oversized actuators, we have developed the patented ECOTROL® soft seal with additional metallic sealing between seat and plug. Thus, the surface pressure of the PTFE soft sealing element always remains within the permissible range - the "cold flow" of the PTFE sealing element is prevented. The defined preload force of the sealing element is achieved by means of O-ring cushioning. This type of soft sealing design has impressively proven its reliability, especially in pressure swing applications, with more than 1 million switching cycles.

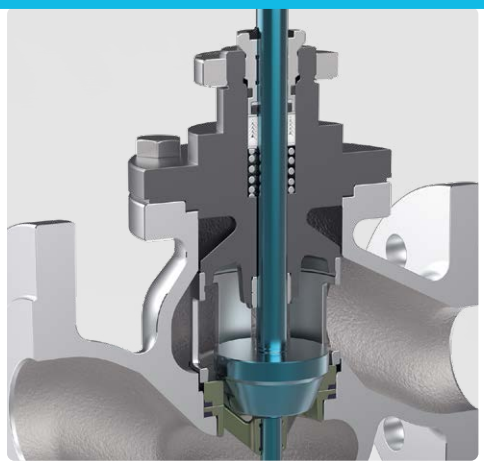

Double guided parabolic plug

In the case of liquids with a high differential pressure ratio, vibrations may occur in the valve plug due to the well-known *Bernoulli effect.* This is prevented by the integrated double guide. With this innovative design, there is no additional sealing point to the outside. The lower guide is open and thus insensitive to contamination. Furthermore this trim can be retrofitted easily and cost-effectively thanks to the ECOTROL® quick change system.

STEM SEAL



Low temperature extension

A sufficient distance between the valve actuator and the functional unit in the process is required for the low temperature range. For these cryogenic conditions we offer you a special ECOTROL® stem extension, which is guided in a thin-walled insulating column. The stem extension is optionally filled with an insulator. This minimizes losses due to heat conduction and heat radiation. We adapt the dimensions of the extension and the cover flange individually to the requirements of your system.

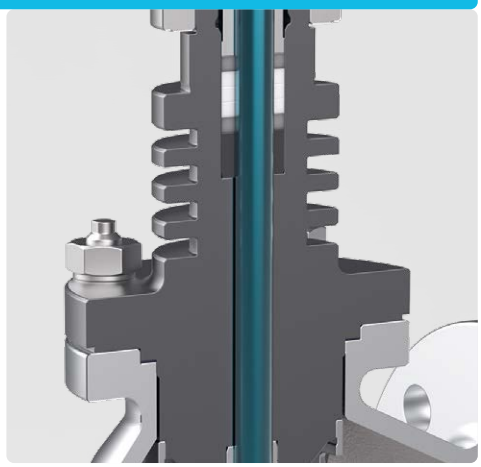

Cooling fins for high temperatures

At operating temperatures above 250 °C, cooling fin attachments are often used in conjunction with a graphite packing. These effect heat radiation and protect the packing material from overheating. If the operating temperature is above 450 °C, the individual design of the cooling fin attachment ensures that the temperature in the packing area does not exceed 450 °C, even in the worst case.

ABOUT THE ECOTROL® VIDEO

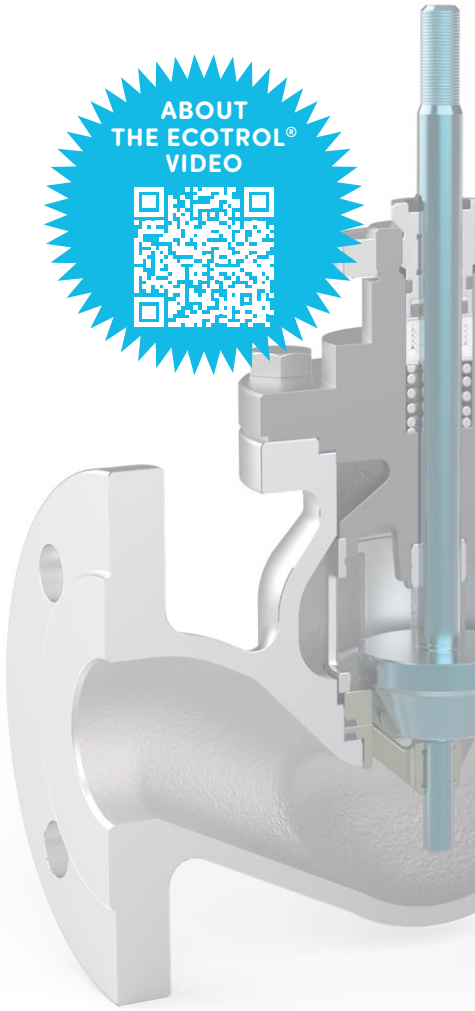

TRIMS

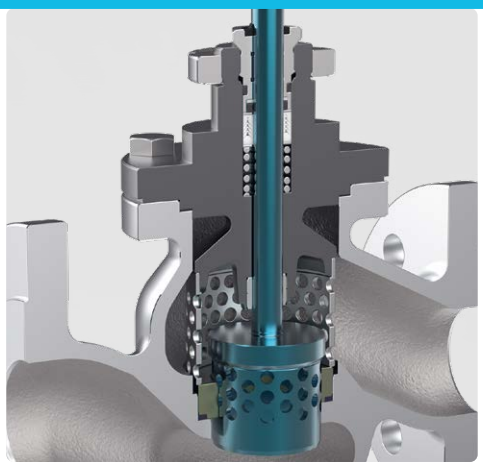

Perforated plug and low noise cage

For the avoidance of cavitation damage and noise, perforated plugs and low noise cages have proven themselves for liquid and compressible media. The cavitation occurring after the hole passage due to the implosion of the gas bubbles takes place in the center of the perforated plug without causing damage to the trim or housing. This increases the service life and thus the cost-effectiveness of heavily stressed control valves for high differential pressure ratios. Noise emissions are sustainably reduced. Noise emissions can be further reduced with a low-noise perforated cage; the valve housing is effectively protected against cavitation damage with a low noise cage under the seat ring.

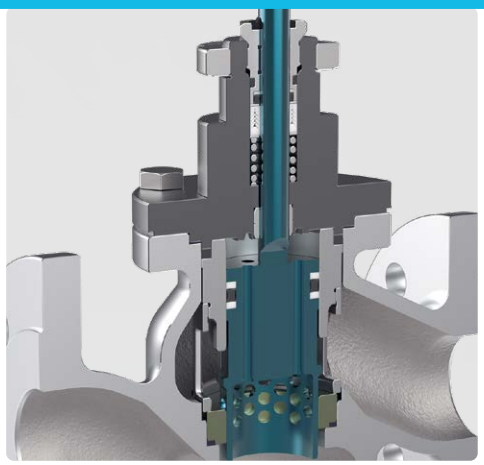

Pressure balanced plugs

Pressure-balanced trims are optimized for the lowest possible actuating forces. The surface of the plug facing opposite of the valve seat is exposed to the same pressure as on the valve seat side by balancing bores and thus is pressure-balanced. An ECOTROL® control valve with this pressure-relieved plug can already be actuated by very small actuators. Depending on the process conditions, the balancing seal is sealed by elastomer rings, spring-loaded PTFE sealing elements or metallic piston rings.

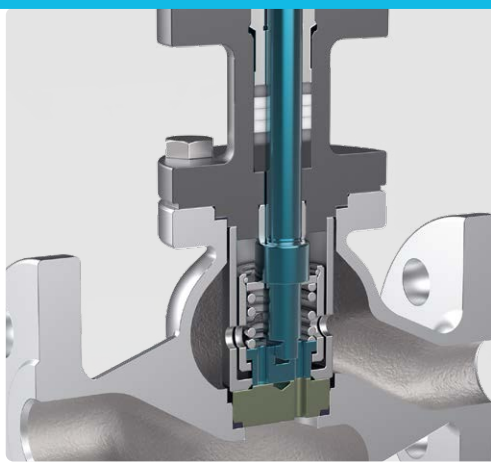

Rotary gate valve trim

The ECOTROL® rotary gate valve trim offers an optimal solution for the precise control of small flow rates. This new system consists of two slices with a lapped surface, each with a bore each, which are pressed together by means of a spring and by the differential pressure. This guarantees absolute tightness, as manufacturing tolerances and thermal expansion no longer play a role. The almost equal percentage control characteristic is achieved through a tangential flow channel, which opens into the bore of this slice. Due to the self-cleaning effect as well as the comprehensive material selection for the throttle element (including ceramic), this system is the first choice in particular for high differential pressures and critical media.

ECOTROL® general data

Nominal size/pressure	8C	6N	6H
DN	15–100 / 1/2"–4"	125–800 / 5"-32"	15–400 / 1/2"-16"
PN / ANSI	16–63 / Class 150–600	16–63 / Class 150–600	100–250 / Class 900–1500

Housing material	EN	for temperatures	ASTM	for temperatures
	1.0619 GP240GH	–10 °C to 400 °C	A 216 WCB	–29 °C to 425 °C
	1.4408 GX5CrNiMo19-11-2	–196 °C to 500 °C	A 351 CF8M	–196 °C to 538 °C
	1.6220 G20Mn5	–40 °C to 400 °C	A 352 LCB	–50 °C to 400 °C
	1.7357 G17CrMo5-5	–10 °C to 530 °C	A 217 WC6	–29 °C to 530 °C
	1.7379 G17CrMo9-10	–10 °C to 600 °C	A 217 WC9	-29° C to 595 °C
Characteristic	Standard: equal percentage or linear			
	Optional: linear modified			
Rangeability	50 : 1	40 : 1		
Double guide	Optional: integrated double guide for the nominal sizes DN 40 – DN 800, Kvs > 25			
Seat leakage	metallic sealing: Leakage class IV (0.01% of Kvs); optional Leakage class V			
	soft-sealing: Leakage class VI			
Bellows seal	double wall made of 1.4571 steel, optional made of Inconel 625, Hastelloy C276 (for PN 16-40 / ANSI 150 and 300, other pressure levels on request)			
Heating jacket	Connections DN 15 PN 40 (1/2" ANSI 300) screw sockets or flange			

ARE YOU FAMILIAR WITH OUR ARCA SERVICE PACKAGES?

On the basis of our comprehensive application knowledge about the entire process or control loop ARCA Services underscore our promise to you:
CONTROL THE FLOW

ARCA launch

With ARCAlaunch we assist you with the commissioning of your control valves. That applies to support during construction and also during the cold and hot commissioning.

ARCA care

With ARCAcare, we offer maintenance contracts that are precisely tailored to your plant. This way, planned prophylactic service dates aren't hampered by everyday operation. The failure of important valves is prevented.

ARCA Regler GmbH · Kempener Str. 18 · 47918 Tönisvorst · [T]: +49 2156 7709-0 · info@arca-valve.com

Subject to change without notice 2224101 01 06.26.3