BELGICAST
WATER IS LIFE

DJET Safety Relief Valve

Series F1 30



SAFETY VALVES

DJET SAFETY RELIEF VALVE

The design and installation of pumping stations and water networks requires large investments. Therefore, it is essential to maintain system integrity and performance.

BELGICAST offers the **DJET Safety Relief Valve** to optimize networks and pumping stations.

DJET Safety Relief Valve protect networks by instantaneous discharge, into the air, of a large enough volume of water to limit a sudden wave of overpressure (water hammer).



Safety relief valve effective against water hammer by instantaneous discharge of overpressure

APPLICATIONS

- **Protection against water hammer on:**
  - Drinking water networks.
  - Raw water, fire or irrigation networks.
  - Industrial water networks.
  - Pumping stations.
- **Water hammer** is the result of a sudden variation in the movement of a body of water in a pipe. It causes very sudden pressure oscillations, and alternating overpressure and negative pressure.
- **This hydraulic shock can be caused by:**
  - A pump starting up.
  - The inappropriate closing of a shutoff device (overpressure in the upstream network).
  - A network filling too quickly.
  - The movement of an air pocket.
  - Shutting down a booster pump (overpressure upstream).
- **The design of DJET safety relief valves** makes them particularly suitable for providing protection against hydraulic shocks:
  - PN 16 or 25 bar.
  - With DN 40/60, 50, 100, 150 and 200 flanges, or threaded DN G ½.
  - Body and bonnet made of cast iron.
  - Epoxy coating approved for contact with drinking water, applied as a primary coat by cataphoresis and as a top coat by powder coating.
  - Stainless steel threaded fasteners.
  - Operating temperature from + 10°C to + 60°C.
  - Fluid: drinking water or screened raw water (2 mm).
  - Factory set, safe and sealed.
  - The setting can be adjusted on-site (provided that the safety relief valve is installed on a shutoff valve).
  - Supplied with a calibrating key.
  - Simple construction for a high degree of accuracy.
  - Discharge not channelled, to provide optimum performances.

- **Compliance with standards:**
  - Tested according to standard ISO 5208-2.
  - EN 1074-5.
  - Drilling of flanges in accordance with EN 1092-2 and ISO 7005-2: ISO PN 10, 16 or 25.
  - French Sanitary Compliance Certificate (A.C.S.).



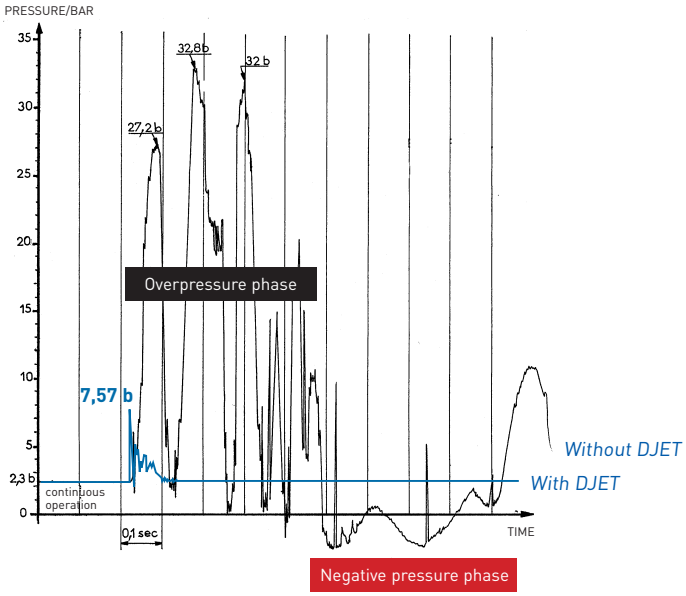

Figure 1: Comparative recording of network with and without DJET safety relief valve

The technical data and performance may be modified without prior notice depending on the technical advances.

CHARACTERISTICS

PERFORMANCE

- Robust construction, polyurethane on tungsten carbide seal, not sensitive to abrasion.
- Valve disc type safety relief valve.
- Safe operation with no guides.
- Valve disc held in place and centred by means of diaphragm system, unaffected by friction or blockages.
- Mechanism protected against water splashes, to prevent corrosion.
- Response time designed for instantaneous opening.
- Conical body shape ensures a high flow rate capacity and provides optimum protection.
- Profiled valve disc to initiate a reacting force proportional to the opening,
- **Discharge into the air to prevent cavitation and obtain a maximum instantaneous flow rate**.
- Sealed when closed, maximum overpressure 1 to 2 bar.

OPERATION

DN 40 TO 100

- The device consists of a body (01) on which a pressure gauge isolating valve (02) and a seat subassembly (03) are mounted.
- The polyurethane seat, held in place by a nut, is sealed by a valve disc subassembly (04).
- The tungsten carbide valve disc is centred and guided by a textile reinforced elastomer diaphragm (05), which protects the adjustment system from water splashes.
- In the upper part, the bonnet contains the spring (06), a set of three screws (07) for adjusting the spring support, and the setting screw (08).
- A locking device (09) ensures the factory setting is maintained.

As soon as the effect of the pressure on the valve disc (04) exceeds the force exerted by the spring, the valve disc rises, allowing a discharge of water in proportion to the overpressure.

The shape of the valve disc directs the flow downwards and causes a reaction which assists with opening. The shape of the body channels the flow.

When the disturbance disappears, the valve disc is closed by the mechanical action of the spring, without generating any overpressure.

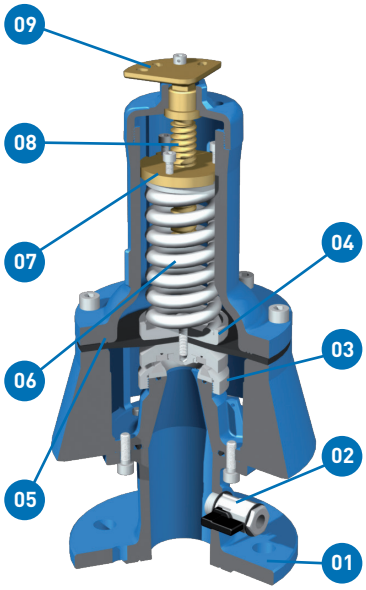

Safety relief valve DN 40 to 100

DN 150 AND 200

- The device consists of a main safety relief valve controlled by a pilot relief valve.
- The main safety relief valve consists of a body (10) on which a seat subassembly (11) is mounted.
- The polyurethane seat (12), held in place by a nut, is sealed by a valve disc subassembly.
- The valve disc (13) is centred and guided by a textile reinforced elastomer rolling diaphragm (14), which, together with the pilot relief valve (15), forms a chamber (A), which is filled via a calibrated opening (B).
- In the upper part, the pilot relief valve is of the same design as a DN 40/60 and 50 safety relief valve.

If the pressure in the pipe exceeds the set pressure, the pilot relief valve opens and discharges a higher flow rate than that which is supplied via the calibrated opening (B).

The pressure in chamber A quickly drops below the network pressure, and the main valve disc (13) rises and discharges the overpressure.

When the pressure in the network returns to the set value, the pilot relief valve closes, chamber A is filled via the calibrated opening (B) and the main valve disc gradually closes.

If there are sudden waves of overpressure (referred to as hydraulic bores), the shock causes the safety relief valve to open instantaneously (see comparative recording, Fig. I, on page 2).

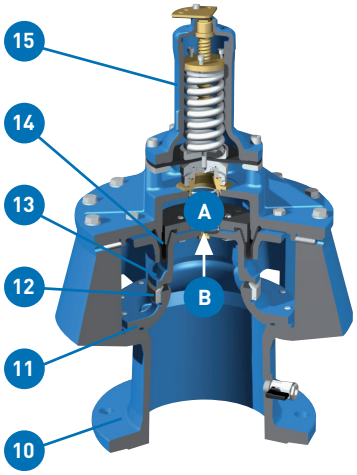

Safety relief valve DN 150 and 200

The technical data and performance may be modified without prior notice depending on the technical advances.

SAFETY VALVES

PARTS LISTS AND DIMENSIONS

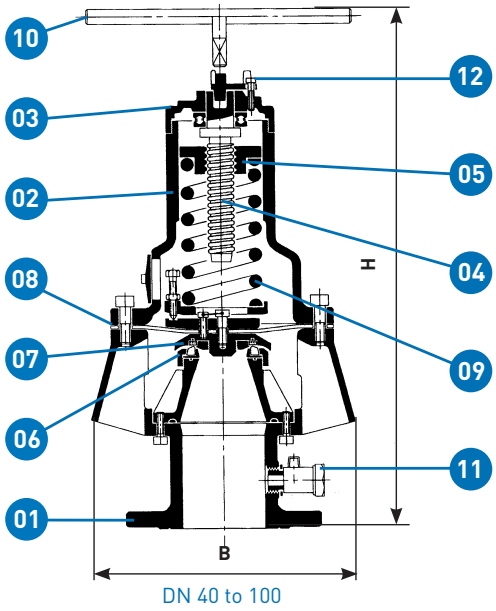

DN 40 to 100

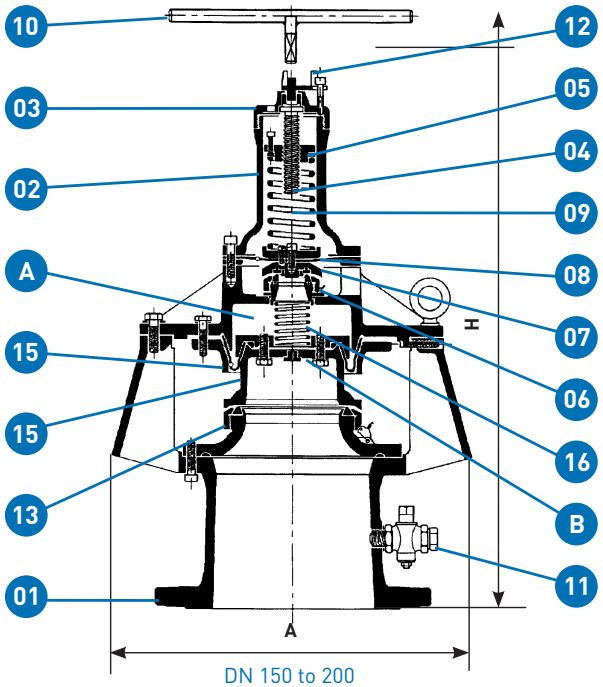

DN 150 to 200

Item	Part name		Item	Materials	Standards
01	Body		1	Cast iron GS/EN-GJS 450-10	EN 1563
02	Bonnet		1	Cast iron GL/EN-GJL-250	EN 1561
03	Top bonnet	DN 40 to 60	1	Cast iron GL/EN-GJL-250	EN 1561
		DN 100	1	Cast iron GS/EN-GJS-450-10	EN 1563
		DN 150 and 200	1	Cast iron GL/EN-GJL-250	EN 1561
04	Setting screw	DN 40 to 60	1	Copper alloy/CuZn40Pb3	EN 12164
		DN 100	1	Stainless steel C 170	EN 3506
		DN 150 and 200	1	Copper alloy/CuZn40Pb3	EN 12164
05	Setting nut	DN 40 to 60	1	Copper alloy/CuZn40Pb3	EN 12164
		DN 100	1	Cast iron GL/EN-GJL-250	EN 1561
		DN 150 and 200	1	Copper alloy/CuZn40Pb3	EN 12164
06	Seat	DN 40 to 100	1	PUR	
		DN 150 and 200	1	Carbide	
07	Valve disc		1	Carbide	
08	Diaphragm		1	Textile reinforced neoprene	
09	Spring		1	Spring steel	
10	Calibrating key		1	Steel	
11	Pressure gauge isolating valve		1	Nickel-plated brass	
12	Locking plate		1	Bronze/CuSn5Pb5Zn5	EN 1982
13	Lower seat	DN 150 and 200	1	PUR	
14	Lower valve disc	DN 150 and 200	1	Cast iron GL/EN-GJL-250	EN 1561
15	Lower diaphragm	DN 150 and 200	1	Textile reinforced neoprene	EN 12164
16	Lower spring	DN 150 and 200	1	Stainless steel/Z10Cn18-08	EN 10088

DN	A (mm)	H (mm)	Poids (Kg)
40/60*	210	460	21
50	210	460	21
65	210	460	21
100	300	590	38
150	445	690	86
200	445	690	88

* For PN 16 model only
All models are drilled ISO PN 10, 16 or 25 according to type and pressure

The technical data and performance may be modified without prior notice depending on the technical advances.

ESTABLISHING A PROJECT

GENERAL

- **Water hammer can start with overpressure when:**
  - A pump starts up.
  - A shutoff device is closed inappropriately (overpressure in the upstream network).
  - A network is filled too quickly.
  - An air pocket moves.
  - A booster pump is shut down (overpressure upstream).
- **Water hammer can start with negative pressure when:**
  - A pump stops suddenly.
  - A shutoff device is closed inappropriately (negative pressure in the downstream network).
- **DJET safety relief valves** are very efficient in the case of water hammer starting with overpressure.
- For water hammer starting with negative pressure, a **DJET safety relief valve** combined with a pressurised air tank will significantly reduce its volume.

SIZING A DJET FOR WATER HAMMER STARTING WITH OVERPRESSURE

- **The following information is necessary:**
  - Nominal flow rate of the installation.
  - Working pressure.
  - Length, nominal diameter and material of the pipe (lengthwise profile).
  - Specifications of the pumps.
- If a detailed study is not possible, **a safety relief valve sized at 80% of the nominal flow rate of the pipe** will be adequate to limit overpressure and water hammer.
- The characteristic curves (Fig. II) **can be used to determine the maximum flow rate capacities** for a given safety relief valve and a set control pressure.
- **A maximum overpressure of 2 bar is necessary** between the watertightness pressure and the pressure to obtain the maximum flow rate of the safety relief valve (Fig. III).
- The watertightness pressure will be specified at **1 bar above the maximum working pressure**.

Fig. II

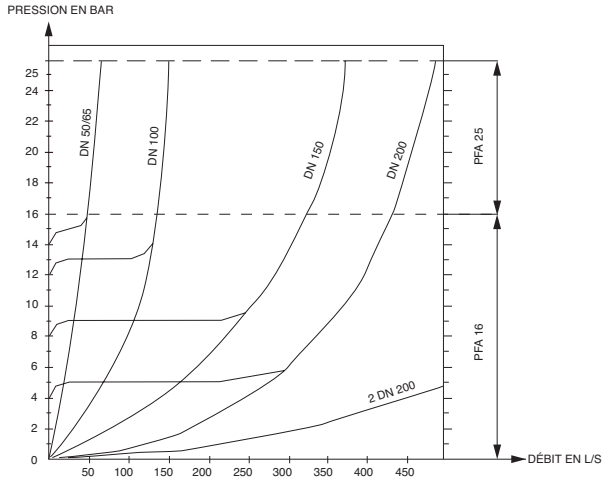

Example: For a watertightness pressure of 8 bar, a DN 150 DJET can discharge a max. flow rate of 240 l/s with a 2 bar overpressure.

Fig. III

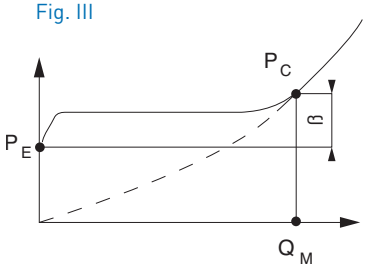

PE: Watertightness pressure (factory setting)
PC: Curve pressure
ß: Max. overpressure (BETA) (ß = PC - PE) (ß is less than 2 bar)
QM: max. flow rate (in l/s)

BELGICAST Customer Technical Support has simulation software. Engineers and technicians are available to help you deal with any problems you may encounter.

The technical data and performance may be modified without prior notice depending on the technical advances.

ESTABLISHING A PROJECT

LOCATING A DJET VALVE

- A device to protect a pipe against water hammer **must be placed as close as possible to the origin of the disturbance**.
- If this is not possible, **DJET safety relief valves must be placed at regular intervals** along the pipe according to the risk levels, and as far a possible at each major pipe intersection.
- **Location examples:**
  - Upstream of an automatic shutoff device (overspeed valve, motorised butterfly valve, etc.) in particular when the valve closing time (in minutes) is less than the length of the pipe (in kilometres).
    The type of closure member must be taken into account, as the cross-section of a butterfly valve is only reduced in the last quarter of its stroke.
  - Upstream of a booster pump, even in the case of variable speed, to deal with sudden stopping due to a break in the electricity supply.
  - Downstream of the pumps in a pumping station. In combination with either a pressurised air tank in order to reduce its volume, or, in some configurations, with an air inlet valve (please contact us).
  - Upstream or downstream of other sources of disturbance such as factories, fire hydrants or major pipe intersections.
  - Downstream of a large pressure reduction station (see also page 7).

MOUNTING A DJET VALVE

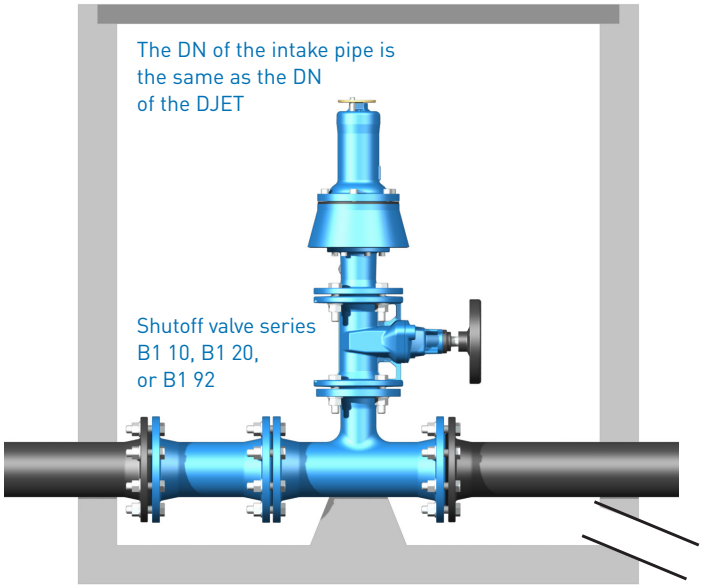



Evacuation of discharge:
its Ø must be approximately
3 times that of the intake pipe

Storage, handling:

- Store for a maximum of one year at a temperature not exceeding 65°C, and protected from humidity and impacts.
- Handle with care, using appropriate lifting equipment attached to the lifting eyes or the flanges.

Package contents:

- A calibrated, sealed DJET relief valve.
- A calibrating key.
- An installation manual.
- A pressure gauge, if required (option).

The technical data and performance may be modified without prior notice depending on the technical advances.

ESTABLISHING A PROJECT

MOUNTING A DJET VALVE

- **A DJET valve is designed to discharge a maximum volume of water instantaneously**. In order to provide optimum performance, this discharge must not encounter any restrictions. For this reason, we have chosen not to channel the discharge of the DJET.
- To provide protection against overpressure in a network supplied via a pressure control valve, **a solution with a relief valve installed as a tap-off of the pipe can be appropriate**.

  This overpressure is not water hammer and **these relief valves offer the advantage of being able to channel the water to a visible point**. The leakage will alert the network supervisor, who can intervene and thus avoid the consequences of a breakage on the downstream network.

Contact your BELGICAST representative or BELGICAST Customer Technical Support.

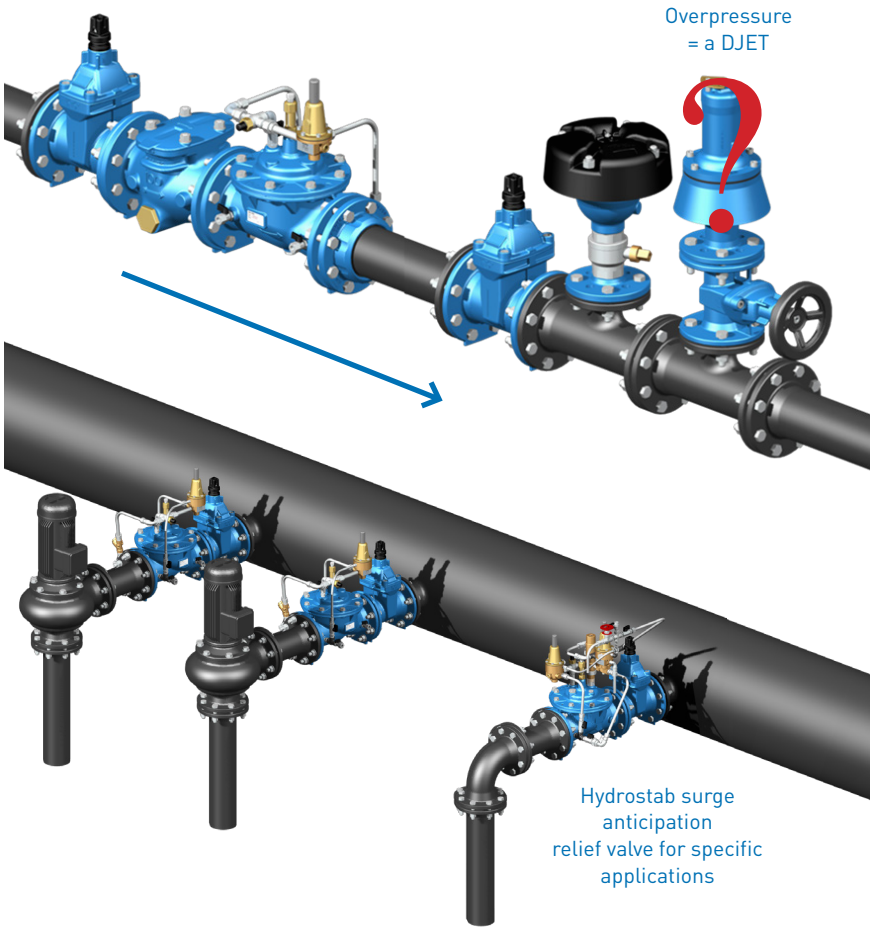

Hydrostab surge anticipation relief valve for specific applications



Monostab relief valve from DN 40



Hydrostab relief valve from DN 32

Safety and environment

All installation, maintenance and repair operations must be carried out by qualified and approved personnel. These operations must comply with current local regulations concerning occupational safety and the environment. Wear appropriate personal protective equipment. Ensure that all lifting equipment and tools used comply with current regulations, and that they are used correctly.

From an environmental perspective, the device is recyclable. Dispose of the cardboard box and/or wooden crate in a recycling container. The packing foam is a neutral waste product and can be taken to a waste treatment centre or incinerated without releasing any toxins. Plastic items (bags, blocks or end closures) must be processed as household waste.

The technical data and performance may be modified without prior notice depending on the technical advances.



BELGICAST is the undisputed Number One for water transport and water flow control. BELGICAST has the best solutions available in the fields of water and energy management as well as for industrial and communal applications. We have numerous products for comprehensive solutions for the whole water cycle – from hydrants, butterfly valves and knife gate valves through to needle valves. Our experience, innovative technology, global expertise and individual consultation processes form the basis for developing long-term solutions for the efficient treatment of the vitally important resource "water".

BELGICAST
Polígono Industrial La Cruz,
Parcela P-4-1, 48196 Lezama
Bizkaia, SPAIN
PHONE +34 94 488 91 00
FAX +34 94 488 91 25
E-MAIL belgicast@belgicast.es
INTERNET www.belgicast.eu

PBR_RGV251103_DJET_EN

Note: Information and specifications may be changed without notification at any time.
Copyright: No copying without express written permission of BELGICAST.
BELGICAST is a Registered Trademark.

BELGICAST