BELGICAST
WATER IS LIFE

Centric Butterfly Valves



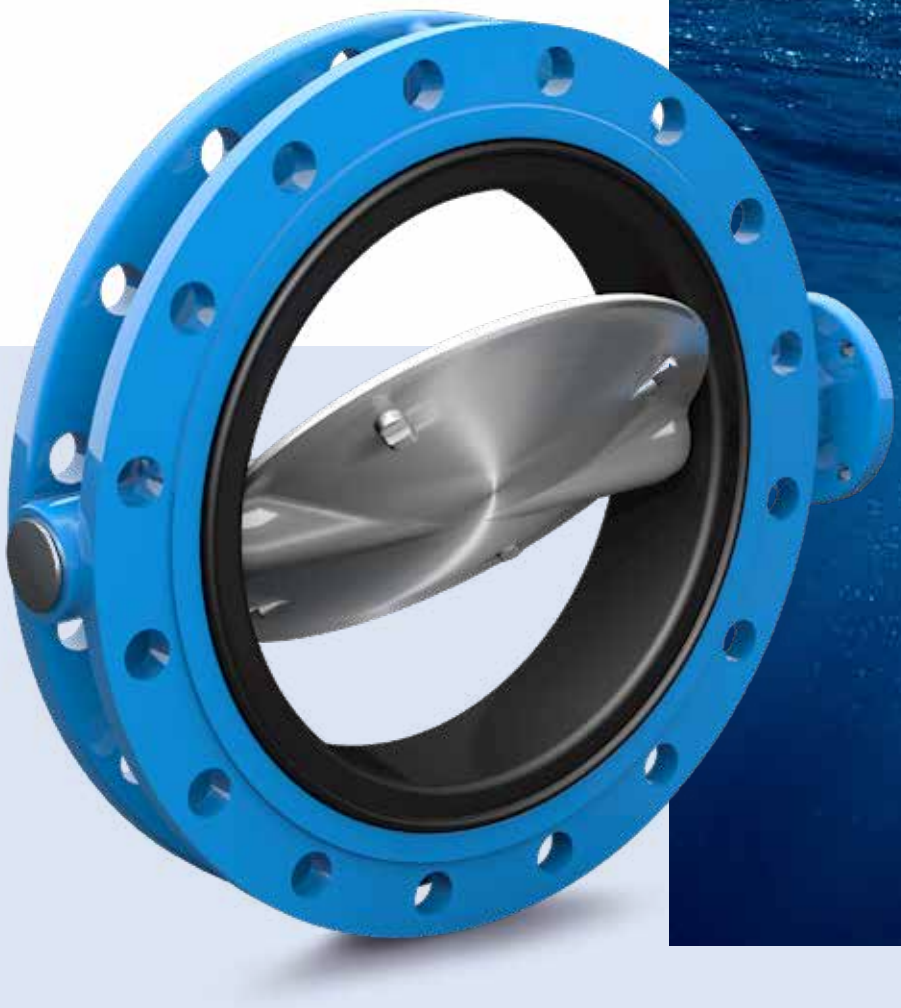

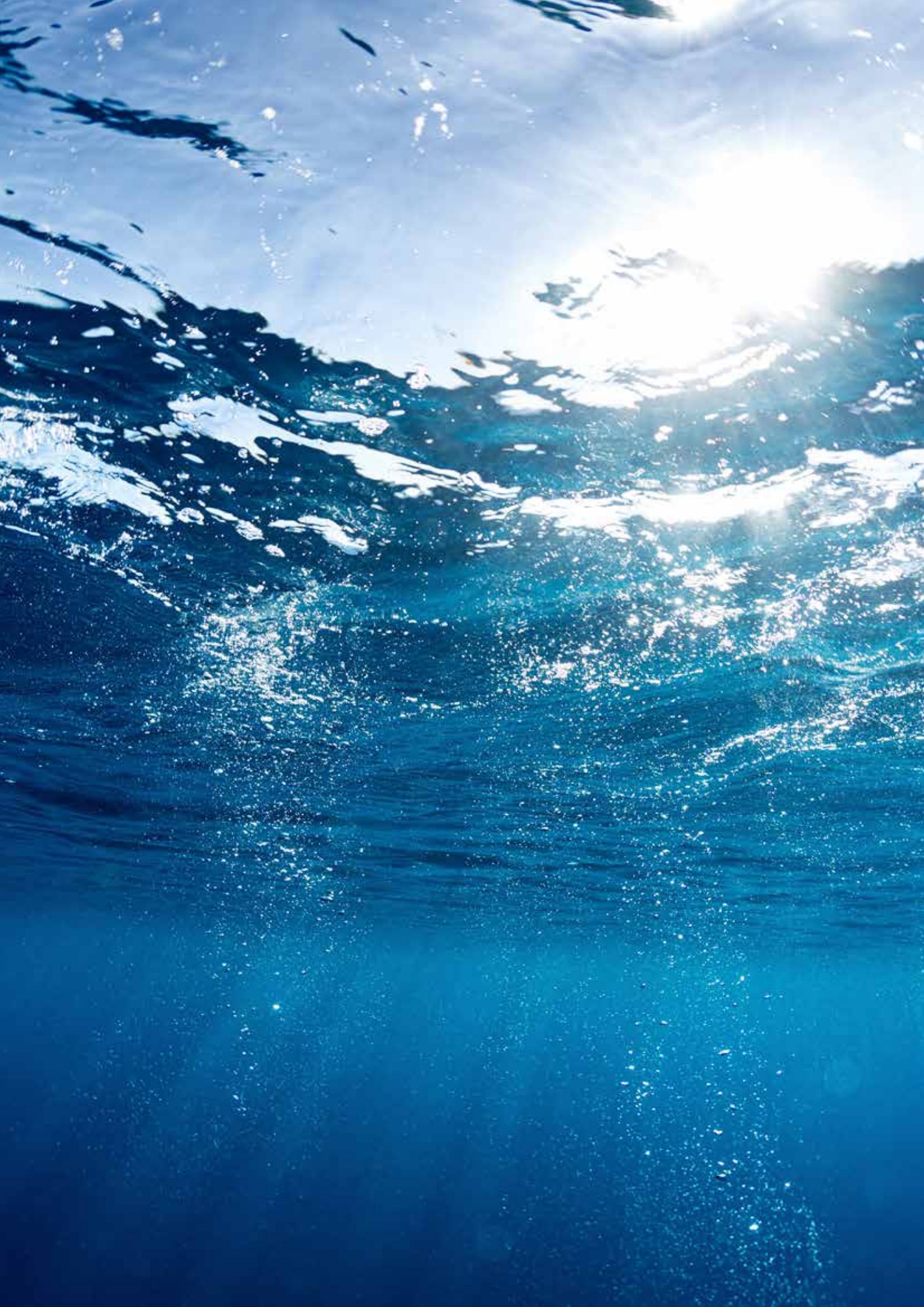

TABLE OF CONTENTS

CENTRIC BUTTERFLY VALVE	004
DESIGN HIGHLIGHTS	006
QUALITY & TESTING	010
LUG TYPE	012
WAFER TYPE	014
FLANGED TYPE	018
INSTALLATION AND OPERATING INSTRUCTIONS	022
HYDRAULIC DATA	026
TORQUE VALUES	028
DESALINATION SOLUTION	029
ACTUATION METHODS	030

CENTRIC BUTTERFLY VALVES

GOLD

The centric butterfly valve « GOLD range » is the basic solution for bidirectional isolation functions by means of a butterfly valve. It is the perfect choice for installation between two piping flanges, or at the end of pipelines.

Due to its extremely short face-to-face dimension, the valve is very compact. Therefore, it allows also the surrounding buildings to be dimensioned very compact and cost-effective. As the valve body is fully covered with a rubber sealing, this valve type can be used in many applications by just adapting the disc coating or material to the application requirements without any huge special effort. The valve is suitable for bidirectional use and is tight in both directions.



ADVANTAGES

- **Compact:** Compact and cost-efficient solution that allows economic layout of valve environment.
- **Versatile:** Modular design allows easy adaption of valve to application requirements.
- **Proven Design:** Reliable European product successfully installed worldwide.

FEATURES

- **Corrosion protection** ensured by valve body fully covered by rubber liner and appropriate disc coating or material.
- **Flange gaskets incorporated** in liner. No additional flange gaskets required.
- **Flexible installation** – Valve can be installed between two piping flanges or at the end of pipeline with our without counter flange (see installation instructions), both installation directions are possible.
- **Automation** – Standard ISO 5211 connection flange allows use of all different kinds of actuators.
- **Replaceable rubber liner.**
- **Wide variety of applications** including drinking water and industrial applications, due to the wide variety of high-grade materials for the liner and disc.
- **Low operating torques.**
- **Long service life.**
- **Easy maintenance with low costs.**
- **Class tightness Rate A** according to EN 12266-1 («0 drops»).
- **Different options** for operating devices.

TECHNICAL DATA

- **Design acc. to EN593 and EN 1074-2**
- **Face-to-face dimension acc. to EN558 series 20**
- **Nominal Diameter (DN):**
  - DN 40 to 300
  - DN700, DN900, DN1400, DN1600
- **Nominal Pressure (PN):**
  - PN 10 to PN 16

Medium Temperature:

Standard up to 50°C (other possibility according to disc and liner material)

MARKETS

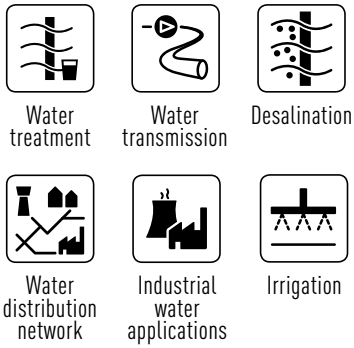

The technical data and performance may be modified without prior notice depending on the technical advances.

CENTRIC BUTTERFLY VALVES

GREATGOLD

Based on 30 years of experience with butterfly valves, Belgicast presents a completely new and trendsetting design. With increased durability and functional features down to the last detail – Quality Made in Europe.

We have developed GREATGOLD to ensure smooth operation for high-cycle operations. Significantly reduced torques allow the use of smaller gearboxes and actuators.

The polygonal shaft-disc connection is free of play without additional pins and transmits the torque without losses. The new liner provides extended service life due to an innovative profile and auto-lubricated material composition.



ADVANTAGES

- **Improved Design:** Completely re-designed to reduce torque and improve durability.
- **Efficient:** The re-design has led to significantly reduced torques, thus allowing the use of smaller gearboxes and actuators.
- **Durability:** The new design scores with uninterrupted corrosion protection and extended service life

IMPROVED FEATURES

- **Enhanced suitability** for high-cycle applications.
- **Significantly reduced torques** allow smaller gearboxes and actuators.
- **Uninterrupted corrosion protection** ensured by polygonal shaft-disc connection without pins.
- **Innovative liner profile** with advanced grip and fit of the liner to the body.
- **Auto-lubricated** material composition of the liner provides an extended service life.
- **Optimized torque transmission** – The polygonal shaft-disc connection is free of play and transmits the torque without losses.
- **Improved contact area** between disc and liner for a perfect balance between tightness and minimum torque.
- **Polished disc surface** for reduced friction between liner and disc.
- **Self-lubricated bushings** for reduced friction between shaft and body.
- **Flattened geometry around the shaft** minimizing torque and wear.

TECHNICAL DATA

- **Design acc. to EN593 and EN 1074-2**
- **Face-to-face dimension acc. to EN558 series 20**
- **Nominal Diameter (DN):**
  - DN350 to 600, DN800, DN1000, DN1100, DN1200, DN1500 (DN700, DN900, DN1400 and DN1600 coming soon)
- **Nominal Pressure (PN):**
  - PN 10 to PN 16

Medium Temperature:

Standard up to 50°C (other possibility according to disc and liner material)

MARKETS

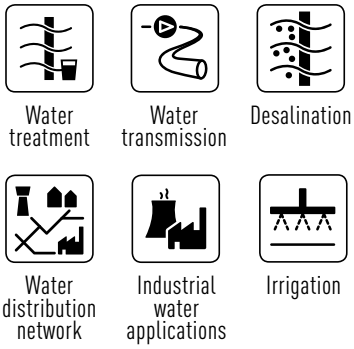

The technical data and performance may be modified without prior notice depending on the technical advances.

DESIGN HIGHLIGHTS GREATGOLD

- EFFICIENT
- DURABLE
- VERSATILE



The technical data and performance may be modified without prior notice depending on the technical advances.

DESIGN HIGHLIGHTS GREATGOLD



POLYGON SHAFT

- **Free of play**, free of play
- Ideal torque transmission
- No additional connecting elements, such as pins

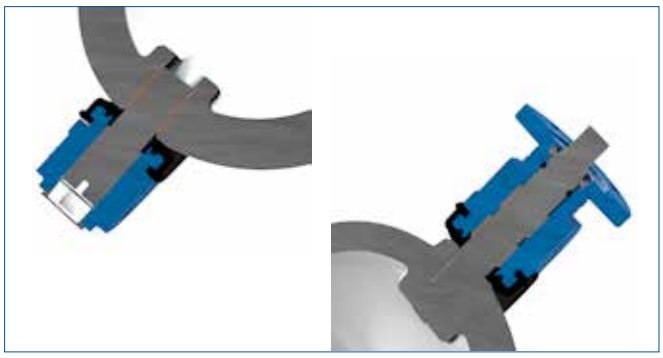

SELF-LUBRICATING BUSHINGS

- **Maintenance-free**
- With reinforced PTFE lining
- Reduced friction



OPTIMIZED TOLERANCE BETWEEN DISC AND LINER

- **Reduced seat wear**
- Perfect balance between tightness and minimum torque
- Polished disc surface
- Flat geometry around the shaft minimizing wear



INNOVATIVE LINER PROFILE

- Advanced grip and fit of the liner to the body
- Self-lubricating material composition
- Reinforced area around the shaft to **avoid water Intrusion**



OPTIONAL LOCKING SYSTEM

- For **safe maintenance** of gearboxes and actuators
- Disc can be blocked in open and closed position
- Easy to use

The technical data and performance may be modified without prior notice depending on the technical advances.

BELGICAST CENTRIC BUTTERFLY VALVES HAVE BEEN DELIVERED TO NUMEROUS INSTALLATIONS IN MORE THAN 140 COUNTRIES

PERFECT CLOSING SYSTEM

The central element of the butterfly valve is the aerodynamically designed valve disc, which is machined spherically. It is mounted centrally in the body in maintenance-free bushings and closes against a single-piece keyed liner, which is firmly anchored in the body thanks to the shape of the internal part of the liner. This way, it seals the complete valve passage resulting in a completely tight seal in both directions of flow..



PROTECTED SHAFT

The design ensures that only the valve disc and liner come into contact with the medium. In contrast, the shaft, which is positively connected with the valve disc, is completely protected. The end of the shaft has involute gearing or a special shape, according to the diameter of the valve, which always guarantees reliable torque transmission without play.



EASY MAINTENANCE

In case it's needed, the liner can be easily replaced at any time. The centring marking helps perform this operation. The disc and the liner can be easily replaced, which reduces maintenance costs, since all the work can be done directly at the set-up location.



ADAPTABILITY TO DIFFERENT APPLICATIONS

Only the disc and the liner are in contact with the fluid, so just by choosing the right materials for these two elements, the valve can be used for different applications, starting with drinking water and finishing with industrial mediums. BELGICAST offers a wide variety of materials for liner and disc

LINER MATERIAL	ABBREVIATION ISO 1629	DESIGNATION	APPLICATION EXAMPLE	WORKING TEMPERATURE*
EPDM	EPDM	Ethylene-Propylene Terpolymer	Water, weak mineral acids and basis, water ketones, esters	-10°C to +80°C
EPDM-HT	EPDM	Ethylene-Propylene Terpolymer	High temperature	-10°C to +130°C
NITRILE	NBR	Acrylonitrile-Butadiene Copolymer	Oils, Greases, Fuel, Gas oil, CO_2, CO, H_2	-10°C to +80°C
SILICONE	MVQ	Poly methyl vinyl siloxane	Steam water, hot air	-60°C to +140°C

DISC COATING MATERIAL	APPLICATION EXAMPLE	WORKING TEMPERATURE*
EPOXY		-10°C to +50°C
HALAR®	High temperature	0°C to +150°C

* Orientation information provided by rubber suppliers. Final performance on the rubber will depend on media composition.

The technical data and performance may be modified without prior notice depending on the technical advances.

NUMEROUS COMBINATIONS TO COVER ALL YOUR APPLICATIONS

OPERATING SYSTEM

- Lever
- Handwheel worm gearbox
- Double acting pneumatic actuator
- Double acting pneumatic actuator (manual emergency)
- Single acting pneumatic actuator
- Single acting pneumatic actuator (manual emergency)
- Electric actuator 1/4 turn
- Electric actuator multi-turn









ACTUATOR OPTIONS

- Position indicator
- Position indicator « Namur »
- Positioner
- Chainwheel
- Extensions
- Solenoid valve
- Limit switches

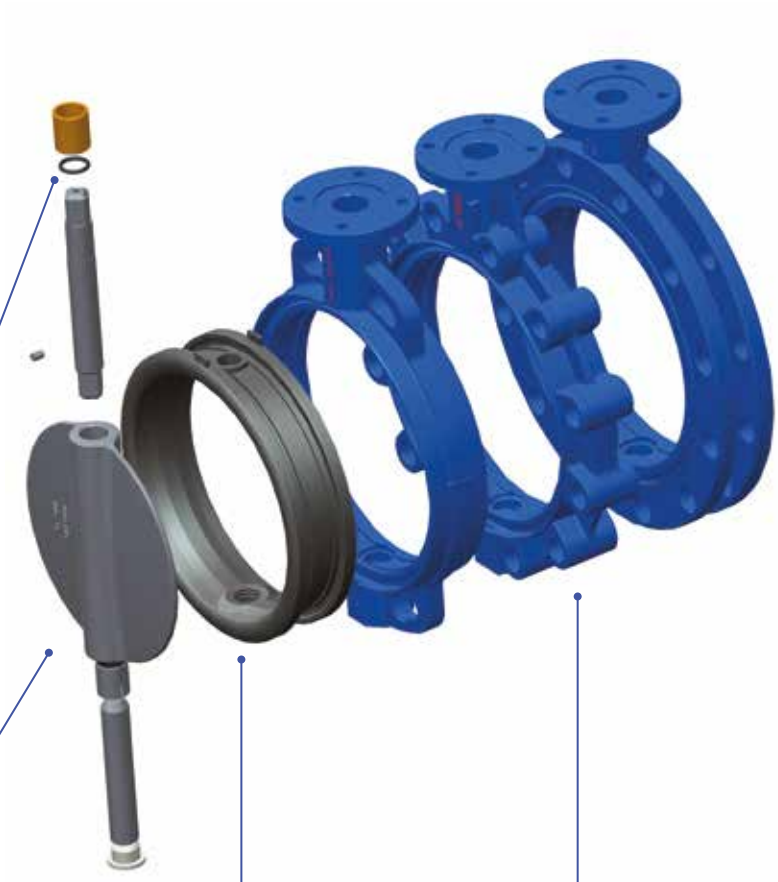

SHAFT

- AISI 420
- AISI 316L
- Duplex

DISC MATERIAL

- GJS 400-15 + epoxy
- GJS 400-15 + Halar® coating
- CF8M (AISI 316)
- CF3M (AISI 316L)
- Duplex ASTM A 995 Gr 4A /5A / 6A

LINER MATERIAL

- EPDM
- Heat EPDM
- NBR
- SILICONE

INSTALLATION

- EN 1092 PN6/10/16,
- ANSI-150,
- BS Table E/D,
- JIS 5K/10K

The technical data and performance may be modified without prior notice depending on the technical advances.

QUALITY & TESTING

VALVE TESTING ACCORDING TO EN 12266-1 ; EN1074 («0» DROPS)

100% of BELGICAST centric butterfly valves are subjected to HIDROSTATIC test and to TIGHTNESS test.

Moreover, BELGICAST centric butterfly valves are also subjected to a PNEUMATIC testing of the disc.

HYDROSTATIC TEST

The butterfly valve with the disc open will be subjected to pressurization with water at 1.5 times the working pressure. The different pressures and the duration of the test will be as shown in the tables I and II.

Before subjecting the valve to pressurization the air must be purged from its interior. The pressure must be maintained throughout the execution of the test.

TABLE I – PRESSURE FOR HYDROSTATIC TEST OF CASING						
	PN-1	PN-3	PN-6	PN-10	PN-16	ANSI-150*
BAR	1,5	4,5	9	15	24	24
PSI	22	64	128	213	342	342

*The maximum pressure in ANSI-150 valves will be equal to those indicated for PN-16

TABLE II – DURATION OF HYDROSTATIC TEST		
DN OF VALVES	EN12266-1 (SECONDS)	API 598 (SECONDS)
up to DN 50	15	15
DN 65 to DN 150	60	60
DN 200 to DN 300	120	120
DN 350 and above	300	300



TIGHTNESS TEST

The test will be performed by subjecting the butterfly valve to pressurization with water, with the disc closed, at 1.1 times the service pressure, as indicated in the tables III and IV.

Before subjecting the valve to pressurization, all the air in its interior must be purged. The pressure must be maintained throughout the execution of the test.

TABLE III – PRESSURE FOR TIGHTNESS TESTING						
	PN-1	PN-3	PN-6	PN-10	PN-16	ANSI-150*
BAR	1,1	3,3	6,6	11	17,6	17,6
PSI	16	47	94	157	250	250

(*)The maximum pressure in ANSI-150 valves will be equal to those indicated for PN-16.

TABLE IV – DURATION OF TIGHTNESS TESTING	
DN OF VALVES	EN 1266-1 (SECONDS)
up to DN 50	15
DN 65 to DN 150	60
DN 200 to DN 300	120
DN 350 and above	300



The technical data and performance may be modified without prior notice depending on the technical advances.

QUALITY & TESTING





BELGICAST guarantees the high quality of THIS PRODUCT RANGE manufactured according to the highest requirements.

APPROVALS

A cutting-edge traceability system applied fromt he reception of raw material to product supply, together with an exhaustive control of processes, guarantees the top quality of our products.

BELGICAST centric butterfly valves are suitable for potable water and they are approved by the most prestigious organisations all over the world.

DVGW

ATTESTATION DE CONFORMITÉ SANITAIRE
ACS

EUROPEAN DIRECTIVE

European directive 2014/68/EU (PED) must be respected in all the countries of the European Union for all equipment under pressure. Valves which are subjected to this European directive are the object of a «CE» marking and also a CE declaration of conformity.

Excluded from the scope of this directive are the networks for the supply, distribution and discharge of water and associated equipment and headraces such as penstocks, pressure tunnels, pressure shafts for hydroelectric installations and their related specific accessories. In this context:

- Water" means: potable water, waste water and effluent, and sewage,
- Networks and associated equipment" means: complete systems for the supply distribution and discharge of water. They extend up to the point of use in buildings, industrial sites and plants, and include equipment closely related to these networks such as water meter and line valves. Pressure vessels, such as expansion vessels, however are not considered to be part of such 'networks and associated equipment' and are therefore not excluded.

The technical data and performance may be modified without prior notice depending on the technical advances.

LUG TYPE -ART.21-(BV-05-2CL) DN 40 - 300

MATERIALS & DIMENSIONS



DN 40 - 300

ITEM	DESCRIPTION	STANDARD MATERIAL
1	Body	EN-GJS-400-15
2	Disc	EN-GJS-400-15 / CF8M
3	Liner	EPDM
4	Shaft	AISI 420
5	Bushing	PTFE
6	Bushing	PTFE
7	Bushing	PTFE
8	O-ring	NBR
9	Washer	A4
10	Circlip	A4

							TOP FLANGE			WEIGHT
DN	A	B	C	E	F	SW	d3	N x Ød4	ISO 5211	(kg)
40	183	125	22	33	10	11	50	4 x 7	F05	2.2
50	190	125	22	43	10	11	50	4 x 7	F05	2.8
65	207	136	22	46	10	11	50	4 x 7	F05	3.2
80	220	142	22	46	10	11	50	4 x 7	F05	4.1
100	258	163	22	52	12	11	50	4 x 7	F05	7.3
125	288.5	176.5	22	56	12	14	70	4 x 10	F07	10
150	326	197	22	56	12	14	70	4 x 10	F07	11.6
200	388	230	22	60	15	17	70	4 x 10	F07	18.5
250	453	260	28	68	15	22	102	4 x 12	F10	30.5
300	514	292	28	78	15	22	125	4 x 14	F12	47

K				N-M		
DN	PN 10	PN 16	ANSI 150	PN 10	PN 16	ANSI 150
40	110	110	98.6	4 - M16	4 - M16	4-1/2" UNC
50	125	125	120.6	4 - M16	4 - M16	4-5/8" UNC
65	145	145	139.7	4 - M16	4 - M16	4-5/8" UNC
80	160	160	152.4	8 - M16	8 - M16	4-5/8" UNC
100	180	180	190.5	8 - M16	8 - M16	8-5/8" UNC
125	210	210	215.9	8 - M16	8 - M16	8-3/4" UNC
150	240	240	241.3	8 - M20	8 - M20	8-3/4" UNC
200	295	295	298.4	8 - M20	12 - M20	8-3/4" UNC
250	350	355	361.9	12 - M20	12 - M24	12-7/8" UNC
300	400	410	431.8	12 - M20	12 - M24	12-7/8" UNC

The technical data and performance may be modified without prior notice depending on the technical advances.

LUG TYPE -ART.21-(BV-05-2CL)

MATERIALS & DIMENSIONS

Installation between flanges according to EN 1092 PN 10/16
Installation according to PN 6, ANSI 150, BS Table E/D, JIS-5K/10K upon request

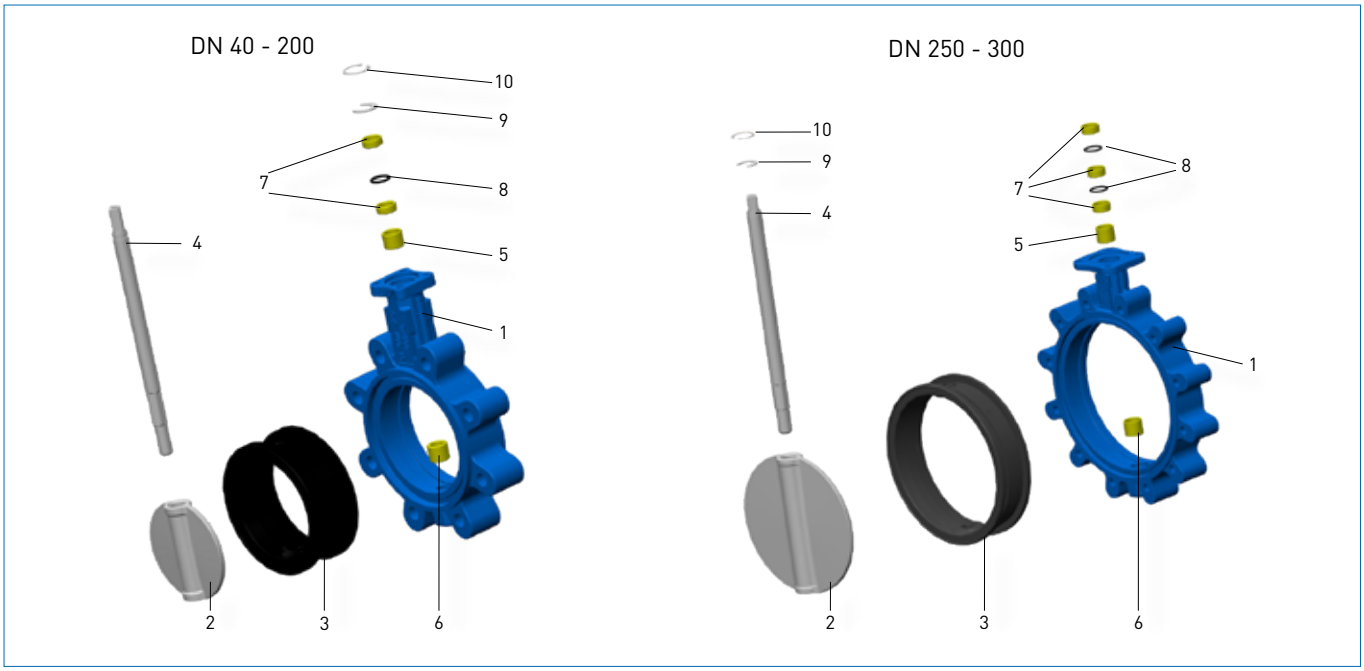

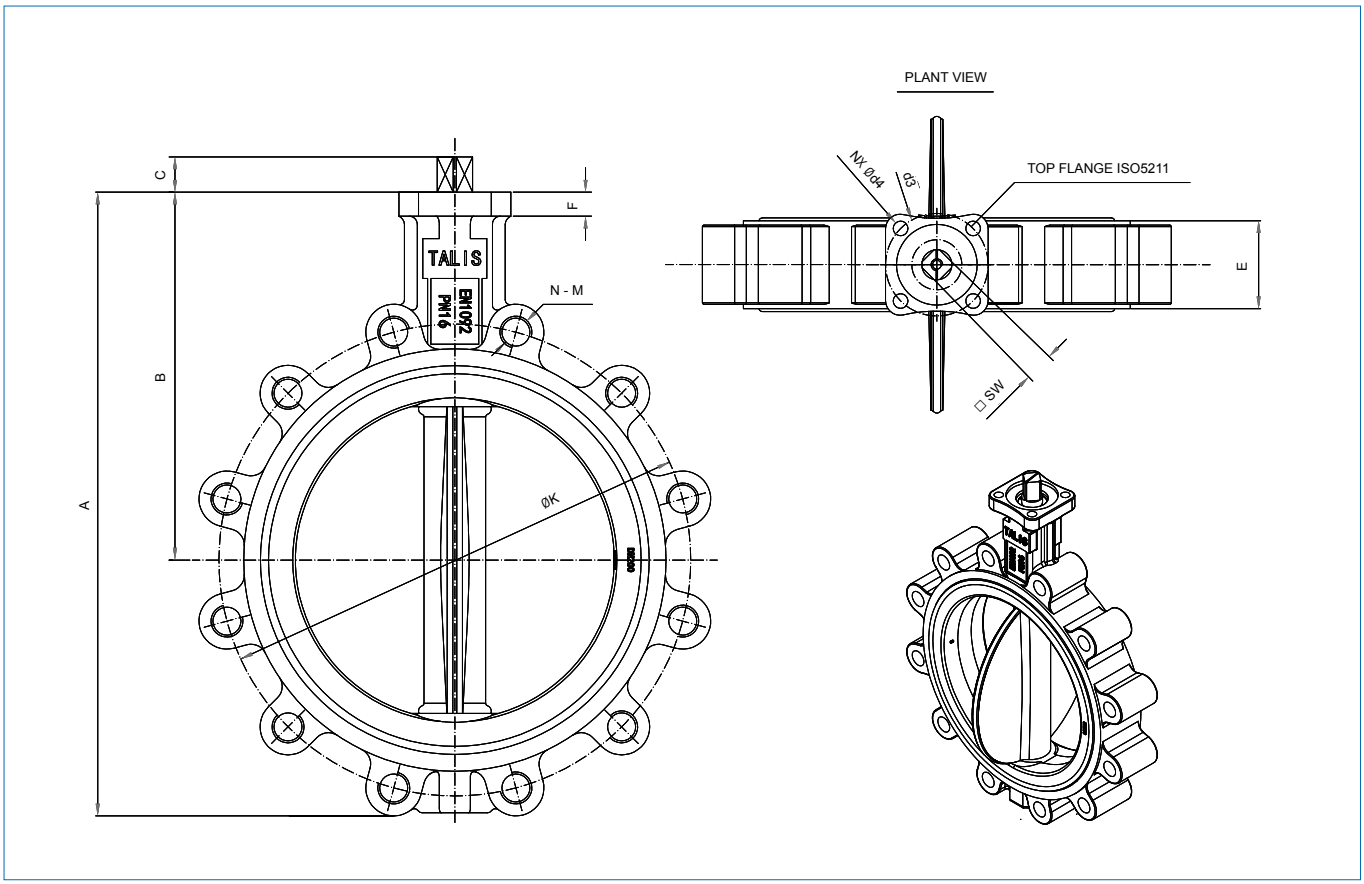

The technical data and performance may be modified without prior notice depending on the technical advances.

WAFER TYPE - ART. 20 - (BV-05-02W) DN 40 - 300

MATERIALS & DIMENSIONS



DN 40 - 300

ITEM	DESCRIPTION	STANDARD MATERIAL
1	Body	EN-GJS-400-15
2	Disc	EN-GJS-400-15 / CF8M
3	Liner	EPDM
4	Shaft	AISI 420
5	Bushing	PTFE
6	Bushing	PTFE
7	Bushing	PTFE
8	O-ring	NBR
9	Washer	A4
10	Circlip	A4

							TOP FLANGE			WEIGHT
DN	A	B	C	E	F	SW	d3	N x Ød4	ISO 5211	(kg)
40	183	125	22	33	10	11	50	4 x 7	F05	2
50	190	125	22	43	10	11	50	4 x 7	F05	2.5
65	207	136	22	46	10	11	50	4 x 7	F05	2.9
80	220	142	22	46	10	11	50	4 x 7	F05	3.3
100	258	163	22	52	12	11	50	4 x 7	F05	5.6
125	288.5	176.5	22	56	12	14	70	4 x 10	F07	7.2
150	326	197	22	56	12	14	70	4 x 10	F07	8.6
200	388	230	22	60	15	17	70	4 x 10	F07	15
250	453	260	28	68	15	22	102	4 x 12	F10	22
300	514	292	28	78	15	22	125	4 x 14	F12	34.5

The technical data and performance may be modified without prior notice depending on the technical advances.

WAFER TYPE - ART. 20 - (BV-05-02W)

MATERIALS & DIMENSIONS

DN 40-200: Installation between flanges according to EN 1092 PN 10/16, PN 6, ANSI 150, BS Table E/D, JIS-5K/10K
DN 250-300: Installation between flanges according to EN 1092 PN 10/16, ANSI-150, BS Table E/D (JIS-5K/10K upon request)

DN 40 - 200

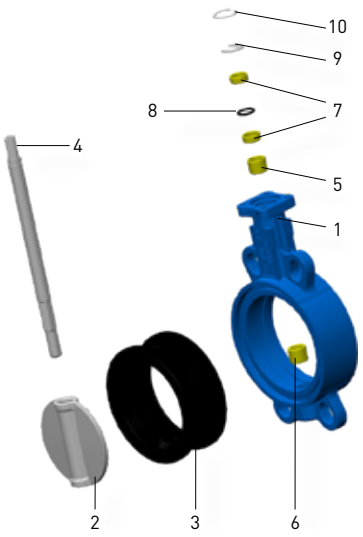

DN 250 - 300

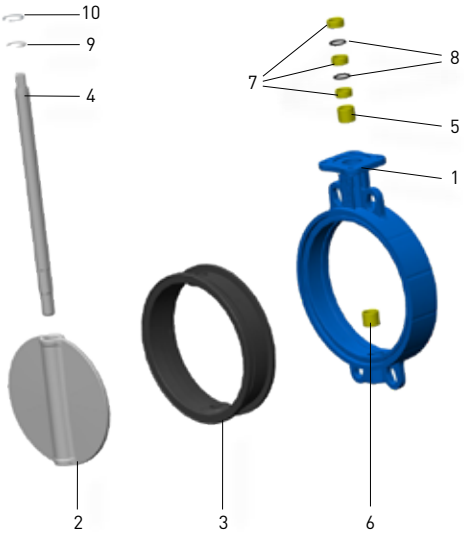

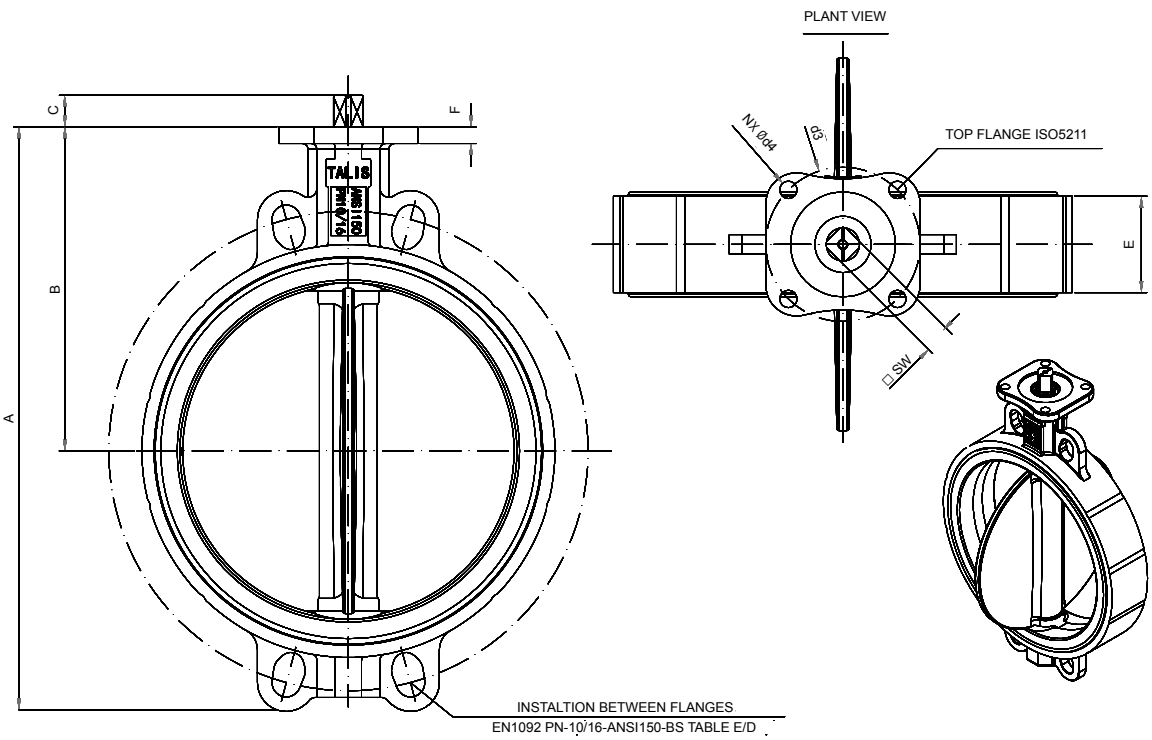

The technical data and performance may be modified without prior notice depending on the technical advances.

WAFER TYPE - ART. 20 - (BV-05-02W) DN 350-700

MATERIALS & DIMENSIONS



DN 350 - 600

ITEM	DESCRIPTION	STANDARD MATERIAL
1	Body	GGG-40
2	Disc	GGG40 / CF8M
3	Liner	EPDM
4	Upper Shaft	AISI 420
5	Lower Shaft	AISI 420
6	Upper Bushing	Steel + PTFE
7	Lower Bushing	Steel + PTFE
8	O-Ring	NBR
9	Washer	A4
10	Circlip	A4
11	Plug	Plastic

DN 700

ITEM	DESCRIPTION	STANDARD MATERIAL
1	Body	GGG-40
2	Disc	GGG-40 / CF8M
3	Liner	EPDM
4	Upper Shaft	AISI 420
5	Lower Shaft	AISI 420
6	Upper Bonnet	Steel F.114
7	Lower Bonnet	Steel F.114
8	Bushing	Steel + PTFE
9	Cotter	Steel
10	Plug Shaft	Steel

							TOP FLANGE			WEIGHT
DN	A	B	C	E	F	SW	d3	d4	ISO 5211	(kg)
350	590	317	28	78	17	22	125	14	F12	35
400	640	337	29	102	17	27	125	14	F12	71
450	711,5	387	38	114	18	36	140	18	F14	84
500	784,5	416	42,5	127	21	36	140	18	F14	108
600	979	485	48	154	21	46	165	23	F16	165
700	1110	575	90	165	32	80	254	18	F25	300

K				N - M			COTTER	
DN	PN 10	PN 16	ANSI 150	PN 10	PN 16	ANSI 150	a	b
350	460	470	476,3	–	–	–	–	–
400	515	525	539,7	–	–	–	–	–
450	565	585	577,9	4 - M24	4 - M27	4 - 1 1/8" 8UN	–	–
500	620	650	635	4 - M24	4 - M30	4 - 1 1/8" 8UN	–	–
600	725	770	749,3	4 - M27	4 - M33	4 - 1 1/4" 8UN	–	–
700	840	840	863	4 - M27	4 - M33	4 - 1 1/4" 8UN	22	7

The technical data and performance may be modified without prior notice depending on the technical advances.

WAFER TYPE - ART. 20 - (BV-05-02W) DN 350-700

MATERIALS & DIMENSIONS

Installation between flanges according to EN 1092 PN 10/16, ANSI-150

DN 350 - 400

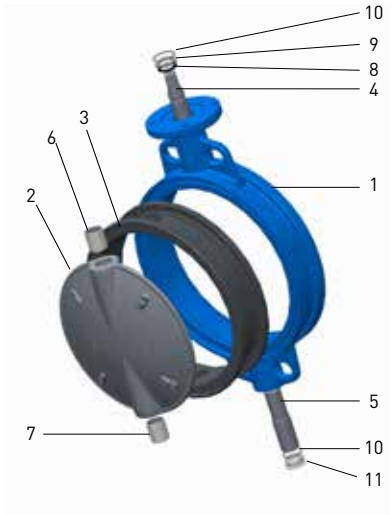

DN 450 - 600

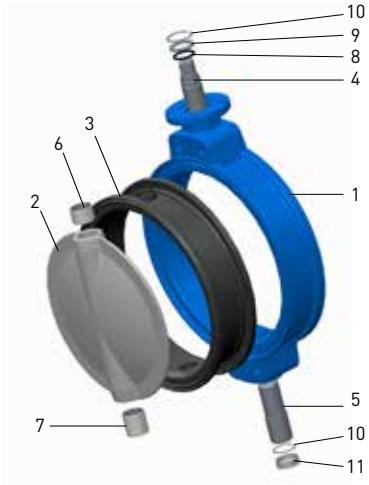

DN 700

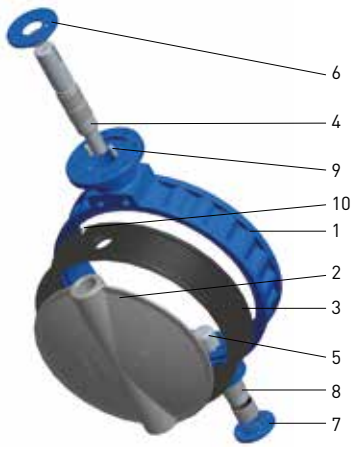

DN 350 - 400

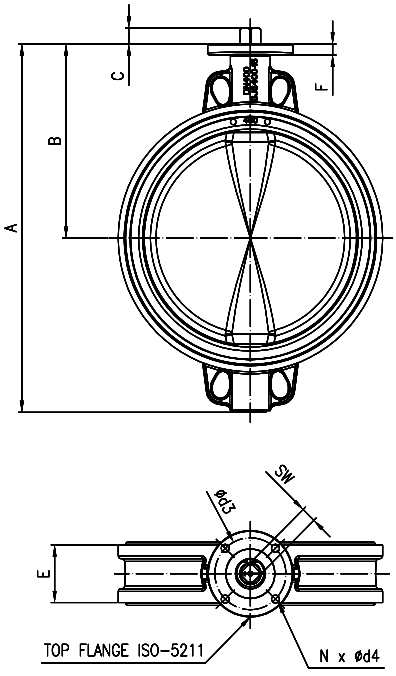

DN 450 - 700

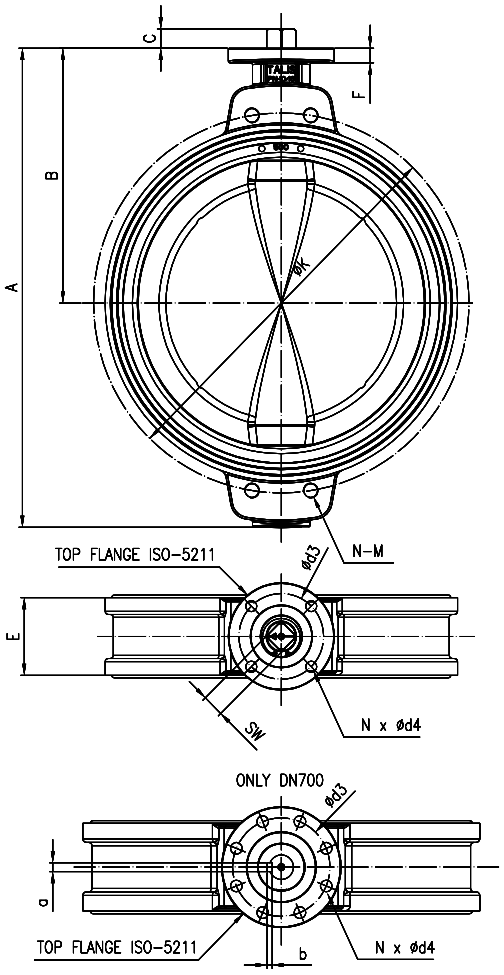

The technical data and performance may be modified without prior notice depending on the technical advances.

FLANGED TYPE - ART. 12 - (BV-05-02F) DN 150 - 600

MATERIALS & DIMENSIONS



DN 150 - 300

ITEM	DESCRIPTION	STANDARD MATERIAL
1	Body	EN-GJS-400-15
2	Disc	EN-GJS-400-15 / CF8M
3	Liner	EPDM
4	Shaft	AISI 420
5	Bushing	PTFE
6	Bushing	PTFE
7	Bushing	PTFE
8	O-ring	NBR
9	Washer	A4
10	Circlip	A4

DN 350 - 600

ITEM	DESCRIPTION	STANDARD MATERIAL
1	Body	GGG40
2	Disc	GGG40 / CF8M
3	Liner	EPDM
4	Upper Shaft	AISI 420
5	Lower Shaft	AISI 420
6	Bushing	Steel + PTFE
7	Bushing	Steel + PTFE
8	O-Ring	NBR
9	Washer	A4
10	Circlip	A4
11	Plug	Plastic

							TOP FLANGE			WEIGHT		
DN	A	B	C	E	F	SW	d3	N x Ød4	ISO 5211	PN 10	PN 16	ANSI 150
150	369	226	22	56	12	14	70	4 x 10	F07	16.3		
200	435	260	22	60	15	17	70	4 x 10	F07	21		
250	495	292	28	68	15	22	102	4 x 12	F10	38		
300	579	337	28	78	15	22	125	4 x 14	F12	53		
350	590	317	27,5	78	17	22	125	4 x 14	F12	54.8	57.6	61
400	640	337	28	102	17	27	125	4 x 14	F12	70.5	78	83
450	711,5	387	36,5	114	18	36	140	4 x 18	F14	101	110	108
500	784,5	416	37	127	21	36	140	4 x 18	F14	125	149	149
600	930	485	46,5	154	21	46	165	4 x 23	F16	260	278	268

K				N - M			n x Ød6		
DN	PN 10	PN 16	ANSI 150	PN 10	PN 16	ANSI 150	PN 10	PN 16	ANSI 150
150	240	240	241,3	-	-	-	8 x 23	8 x 23	8 x 22,4
200	295	295	298,4	-	-	-	8 x 23	12 x 23	8 x 22,4
250	350	355	361,9	-	-	-	12 x 23	12 x 28	12 x 25,4
300	400	410	431,8	-	-	-	12 x 23	12 x 28	12 x 25,4
350	460	470	476,3	-	-	-	16 x 22	16 x 26	16 x 28,5
400	515	525	539,7	-	-	-	16 x 26	16 x 31	16 x 28,5
450	565	585	577,9	4 - M24	4 - M27	4-1 1/8" 8UN	16 x 26	16 x 30	12 x 32
500	620	650	635	4 - M24	4 - M30	4-1 1/8" 8UN	16 x 28	16 x 34	16 x 32
600	725	770	749,3	4 - M27	4 - M33	4-1 1/4" 8UN	16 x 31	16 x 37	16 x 35

The technical data and performance may be modified without prior notice depending on the technical advances.

FLANGED TYPE - ART. 12 - (BV-05-02F) DN 150 - 600

MATERIALS & DIMENSIONS

Installation between flanges according to EN 1092 PN 10/16, ANSI-150

DN 150 - 250

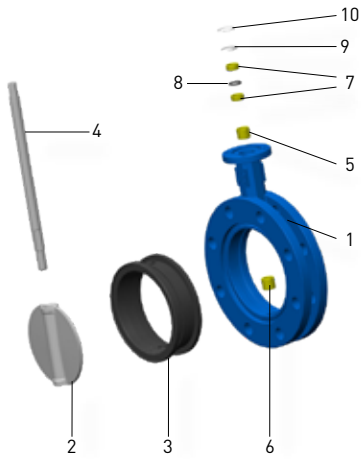

DN 300

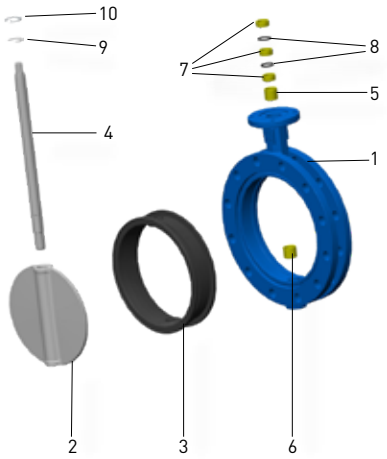

DN 350-600

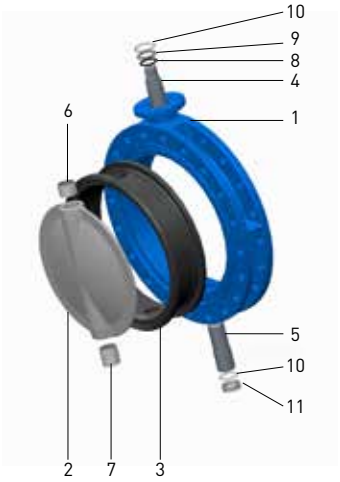

DN 150 - 300

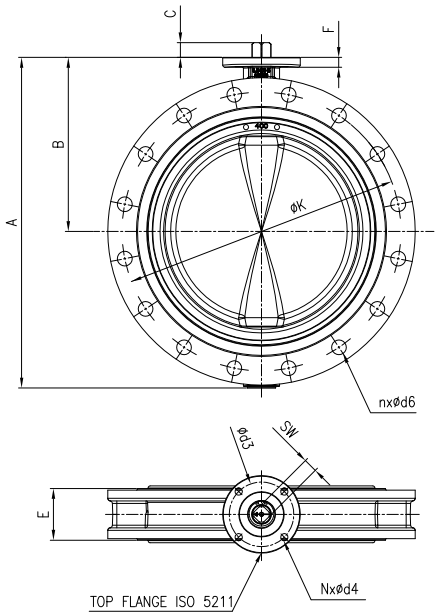

DN 350 - 600

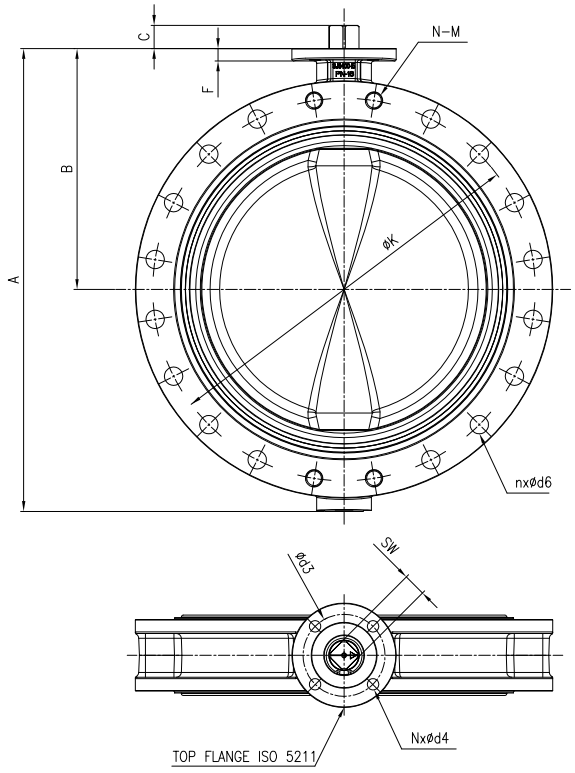

The technical data and performance may be modified without prior notice depending on the technical advances.

FLANGED TYPE - ART. 12 - (BV-05-02F) DN 700-1600

MATERIALS & DIMENSIONS



DN700, DN900, DN1400, DN1600

ITEM	DESCRIPTION	STANDARD MATERIAL
1	Body	GGG-40
2	Disc	GGG-40 / CF8M
3	Liner	EPDM
4	Upper Shaft	AISI 420
5	Lower Shaft	AISI 420
6	Upper Bonnet	Steel F.114
7	Lower Bonnet	Steel F.114
8	Bushing	Steel + PTFE
9	Cotter	Steel
10	Plug Shaft	Steel

DN800, DN1000, DN1100, DN1200, DN1500

ITEM	DESCRIPTION	STANDARD MATERIAL
1	Body	GGG-40
2	Disc	GGG-40/CF8M
3	Liner	EPDM
4	Upper Shaft	AISI 420
5	Lower Shaft	AISI 420
6	Bushing	Bronze B62
7	Lower Bonnet	Steel F114
8	Bushing	Steel + PTFE
9	Circlip	Steel
10	O Rings	NBR
11	Washers	AISI 316
12	Bolts	A4

							TOP FLANGE			WEIGHT		
DN	A	B	C	E	F	J	d3	d4	ISO 5211	PN 10	PN 16	ANSI 150
700	1110	575	90	165	32	80	254	18	F25	350	370	370
800	1116	617	112	190	36	72	254	18	F25	400	410	420
900	1380	690	116	203	37	95	254	18	F25	600	650	650
1000	1415	744	113	216	33	72	254	18	F25	650	682	690
1100	1570	795	102	216	45	80	254	18	F25	740	750	760
1200	1651	855	133	254	48	133	298	22	F30	955	973	1020
1400	1960	980	126	279	46	120	356	33	F35	1120	1280	1280
1500	2041	1076	178	279	46	120	415	260	F35	-	-	1700
1600	2155	1090	155	318	41	150	406	43	F40	1980	2100	2350

	K			N - M			nxØd6			COTTER	
DN	PN 10	PN 16	ANSI 150	PN 10	PN 16	ANSI 150	PN 10	PN 16	ANSI 150	a	b
700	840	840	863	4 - M27	4 - M33	4-1 1/4" 8UN	20x30	20x36	24x35	22	7
800	950	950	978	4 - M30	4 - M36	4-1 1/2" 8UN	20x33	20x39	24x41	20	7
900	1050	1050	1089	4 - M30	4 - M36	4-1 1/2" 8UN	24x33	24x39	28x41	28	8
1000	1160	1170	1200	4 - M33	4 - M39	4-1 1/2" 8UN	24x36	24x42	32x41	20	7
1100	1270	1270	1314.4	4 - M33	4 - M39	4-1 1/2" 8UN	28x36	28x42	36x41	22	9
1200	1380	1390	1422.4	4 - M36	4 - M45	8-1 1/2" 8UN	28x40	28x49	36x41	28	10
1400	1590	1590	1651	4 - M39	4 - M45	4-1 3/4" 8UN	32x43	32x49	44x48	32	11
1500	-	-	1759	-	-	8-1 3/4" 8UN	-	-	44x48	28	16
1600	1820	1820	1930	4 - M45	4 - M52	8-1 3/4" 8UN	36x49	36x56	44x48	36	13

The technical data and performance may be modified without prior notice depending on the technical advances.

FLANGED TYPE - ART. 12 - (BV-05-02F) DN 700-1600

MATERIALS & DIMENSIONS

Installation between flanges according to EN 1092 PN 10/16, ANSI-150

DN700, DN900, DN1400, DN1600

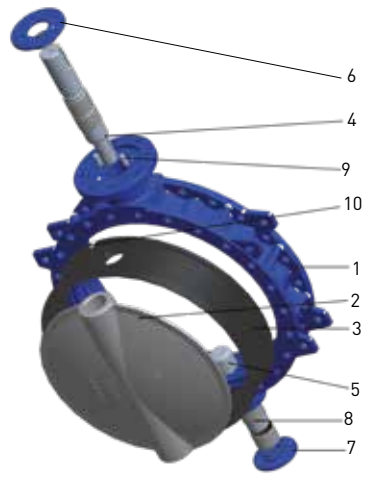

DN800, DN1000, DN1100, DN1200, DN1500

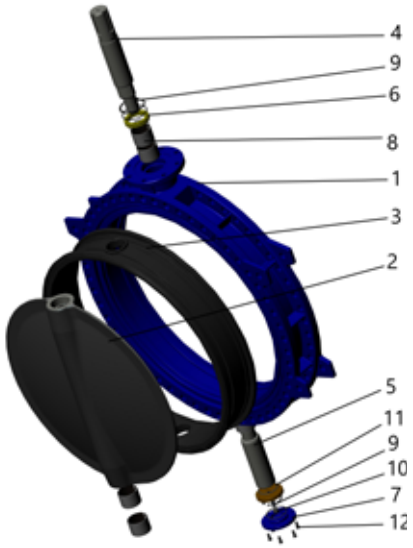

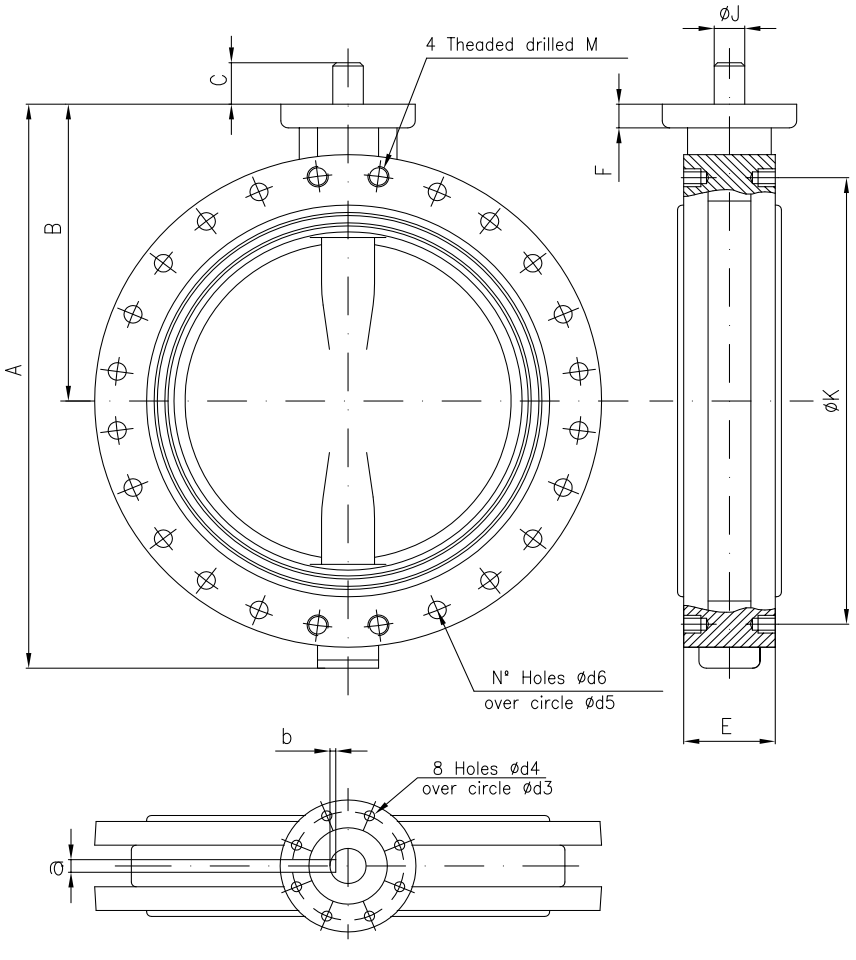

The technical data and performance may be modified without prior notice depending on the technical advances.

INSTALLATION AND OPERATION INSTRUCTIONS

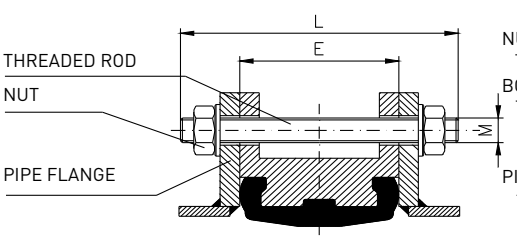

FLANGE TYPE 1

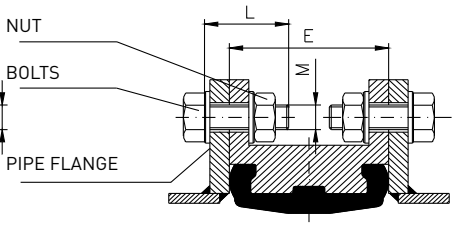

FLANGE TYPE 2

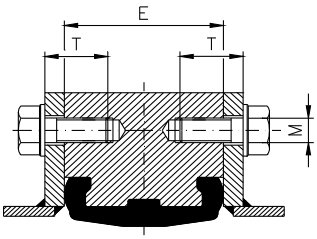

BOLTS

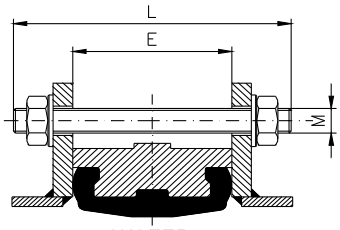

WAFER

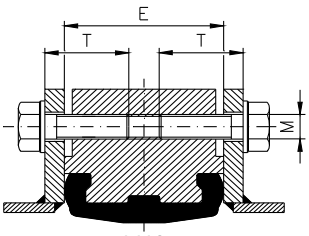

LUG

E = Valve face to face distance
L = Threaded rod length
T = Bolt length
M = Rod, bolt or nut metric size
No = Number of rods or bolts

VALVE			PN 10														PN 16												ANSI-150											
			BOLTING FOR FLANGE TYPE 1 AND WAFER						BOLTING FOR FLANGE TYPE 2					BOLTING FOR LUG			BOLTING FOR FLANGE TYPE 1 AND WAFER						BOLTING FOR FLANGE TYPE 2					BOLTING FOR LUG			BOLTING FOR FLANGE TYPE 1 AND WAFER						BOLTING FOR FLANGE TYPE 2				BOLTING FOR LUG		
			THREADED ROD			CENTRAL BOLTS			BOLTS			NUT		BOLTS			THREADED ROD			CENTRAL BOLTS			BOLTS			NUT		BOLTS			THREADED ROD			CENTRAL BOLTS			BOLTS			NUT		BOLTS		
DN	inches (")	E	L	M	N.°	T	M	N.°	T	M	N.°	M	N.°	T	M	N.°	L	M	N.°	T	M	N.°	T	M	N.°	M	N.°	T	M	N.°	L	M (")	N.°	T	M (")	N.°	T	M (")	N.°	M (")	N.°	T	M (")	N.°
40	1 1/2	33	110	16	4	-	-	-	-	-	-	-	-	30	16	8	110	16	4	-	-	-	-	-	-	-	-	30	16	8	110	1/2 UNC	4	-	-	-	-	-	-	-	-	30	1/2 UNC	4
50	2	43	125	16	4	-	-	-	-	-	-	-	-	35	16	8	125	16	4	-	-	-	-	-	-	-	-	35	16	8	125	5/8 UNC	4	-	-	-	-	-	-	-	-	35	5/8 UNC	4
65	2 1/2	46	130	16	4	-	-	-	-	-	-	-	-	40	16	8	130	16	4	-	-	-	-	-	-	-	-	40	16	8	130	5/8 UNC	4	-	-	-	-	-	-	-	-	40	5/8 UNC	4
80	3	46	130	16	8	-	-	-	-	-	-	-	-	40	16	16	130	16	8	-	-	-	-	-	-	-	-	40	16	16	130	5/8 UNC	4	-	-	-	-	-	-	-	-	40	5/8 UNC	4
100	4	52	140	16	8	-	-	-	-	-	-	-	-	45	16	16	140	16	8	-	-	-	-	-	-	-	-	45	16	16	140	5/8 UNC	8	-	-	-	-	-	-	-	-	45	5/8 UNC	8
125	5	56	145	16	8	-	-	-	-	-	-	-	-	50	16	16	145	16	8	-	-	-	-	-	-	-	-	50	16	16	145	3/4 UNC	8	-	-	-	-	-	-	-	-	50	3/4 UNC	8
150	6	56	155	20	8	-	-	-	-	-	-	-	-	50	20	16	155	20	8	-	-	-	-	-	-	-	-	50	20	16	155	3/4 UNC	8	-	-	-	-	-	-	-	-	50	3/4 UNC	8
200	8	60	165	20	8	-	-	-	-	-	-	-	-	50	20	16	165	20	12	-	-	-	-	-	-	-	-	50	20	24	165	3/4 UNC	8	-	-	-	-	-	-	-	-	50	3/4 UNC	8
250	10	68	175	20	12	-	-	-	-	-	-	-	-	60	20	24	180	24	12	-	-	-	-	-	-	-	-	60	24	24	180	7/8 UNC	12	-	-	-	-	-	-	-	-	60	7/8 UNC	12
300	12	78	185	20	12	-	-	-	-	-	-	-	-	65	20	24	200	24	12	-	-	-	-	-	-	-	-	65	24	24	200	7/8 UNC	12	-	-	-	-	-	-	-	-	65	7/8 UNC	12
350	14	78	185	20	12	-	-	-	-	-	-	-	-	-	-	-	200	24	12	-	-	-	-	-	-	-	-	-	-	-	210	1" UNC	12	-	-	-	-	-	-	-	-	-	-	-
400	16	102	220	24	12	-	-	-	70	24	24	24	24	-	-	-	240	27	12	-	-	-	70	27	24	27	24	-	-	-	230	1" UNC	16	-	-	-	100	1" UNC	32	1" UNC	32	-	-	-
450	18	114	240	24	16	50	24	8	70	24	32	24	32	-	-	-	265	27	16	65	27	8	70	27	32	27	32	-	-	-	260	1 1/8 8UN	12	80	1 1/8 8UN	8	110	1 1/8 8UN	24	1 1/8 8UN	24	-	-	-
500	20	127	260	24	16	65	24	8	85	24	32	24	32	-	-	-	270	30	16	65	30	8	85	30	32	30	32	-	-	-	280	1 1/8 8UN	16	80	1 1/8 8UN	8	120	1 1/8 8UN	32	1 1/8 8UN	32	-	-	-
600	24	154	300	27	16	65	27	8	100	27	32	27	32	-	-	-	310	33	16	75	33	8	110	33	32	33	32	-	-	-	320	1 1/4 8UN	16	90	1 1/4 8UN	8	120	1 1/4 8UN	32	1 1/4 8UN	32	-	-	-
700	28	165	310	27	20	70	27	8	110	27	40	27	40	-	-	-	330	33	20	75	33	8	120	33	40	33	40	-	-	-	330	1 1/4 8UN	24	90	1 1/4 8UN	8	120	1 1/4 8UN	48	1 1/4 8UN	48	-	-	-
800	32	190	350	30	20	75	30	8	120	30	40	30	40	-	-	-	370	36	20	80	36	8	130	36	40	36	40	-	-	-	360	1 1/2 8UN	24	90	1 1/2 8UN	8	130	1 1/2 8UN	48	1 1/2 8UN	48	-	-	-
900	36	203	360	30	24	75	30	8	120	30	48	30	48	-	-	-	400	36	24	90	36	8	140	36	48	36	48	-	-	-	400	1 1/2 8UN	28	90	1 1/2 8UN	8	130	1 1/2 8UN	56	1 1/2 8UN	56	-	-	-
1000	40	216	380	33	24	85	33	8	130	33	48	33	48	-	-	-	420	39	24	95	39	8	150	39	48	39	48	-	-	-	410	1 1/2 8UN	32	100	1 1/2 8UN	8	140	1 1/2 8UN	64	1 1/2 8UN	64	-	-	-
1100	44	216	380	33	28	75	33	8	130	33	56	33	56	-	-	-	420	39	28	75	39	8	150	39	56	39	56	-	-	-	420	1 1/2 8UN	36	100	1 1/2 8UN	8	140	1 1/2 8UN	72	1 1/2 8UN	72	-	-	-
1200	48	260	440	36	28	95	36	8	140	36	56	36	56	-	-	-	480	45	28	105	45	8	160	45	56	45	56	-	-	-	470	1 1/2 8UN	36	110	1 1/2 8UN	16	150	1 1/2 8UN	72	1 1/2 8UN	72	-	-	-
1400	56	279	470	39	32	100	39	8	145	39	64	39	64	-	-	-	510	45	32	115	45	8	170	45	64	45	64	-	-	-	510	1 3/4 8UN	40	125	1 3/4 8UN	16	190	1 3/4 8UN	80	1 3/4 8UN	80	-	-	-
1500	60	279	470	39	32	100	39	8	145	39	64	39	64	-	-	-	540	52	32	120	52	8	180	52	64	52	64	-	-	-	530	1 3/4 8UN	44	130	1 3/4 8UN	16	200	1 3/4 8UN	88	1 3/4 8UN	88	-	-	-
1600	66	318	530	45	36	105	45	8	160	45	72	45	72	-	-	-	580	52	36	120	52	8	180	52	72	52	72	-	-	-	550	1 3/4 8UN	44	120	1 3/4 8UN	16	170	1 3/4 8UN	88	1 3/4 8UN	88	-	-	-

Bolting length L and T calculated considering the flange thickness acc. to the following standards:
- PN10/16: EN 1092-2
- ANSI-150:
  · 1 1/2" to 24": ASME B16.5
  · 26" to 60": ASME B16.47 Serie B type WNF
  · 66": AWWA C207 class D

The technical data and performance may be modified without prior notice depending on the technical advances.

INSTALLATION AND OPERATION INSTRUCTIONS

DIMENSIONS FOR INSTALLATION

GOOD TO KNOW BEFORE INSTALLATION

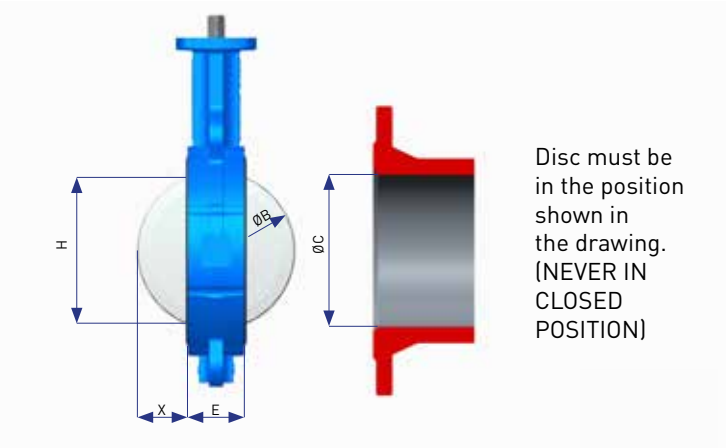

Disc must be in the position shown in the drawing. (NEVER IN CLOSED POSITION)

DN	H	X	E	B	C min	C max
40	28	5	33	43.5	30	49.5
50	32	5	43	53.4	40	61.5
65	46	10	46	65.2	56	77.5
80	64	17	46	79.2	72	90.5
100	91	27	52	104.8	95	116
125	111	34	56	124.3	117	141.5
150	143	50	56	156.7	145	170.5
200	193.8	72	60	202.9	196	221.5
250	241.5	91	68	250.9	243	276.5
300	291.8	111	78	302	295	327.5
350	321	165.5	78	331	340	359
400	367	139.5	102	381	385	411
450	415	158	114	430.5	435	462
500	464	177	127	481	482	513.5
600	561	213	154	582	585	616.5
700	677.2	266	165	697	688	725
800	757	295.5	190	781	775	820
900	865.5	342.4	203	889	877	925
1000	959	384	216	984	982	1045
1100	1081.6	443.5	216	1103	1093	1140
1200	1134	452	260	1164	1180	1260
1400	1359.7	554.5	279	1388	1370	1465
1500	1433	596	279	1463	1460	1543
1600	1559.9	637	318	1592	1575	1665

The technical data and performance may be modified without prior notice depending on the technical advances.

INSTALLATION AND OPERATION INSTRUCTIONS

VALVE INSTALLATION POSITIONING IN PIPE

1. Leave space enough between flanges as to facilitate the introduction of the valve without dragging the body.

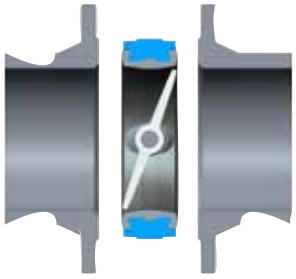

Fig. A

2. Prior to flange bolt tightening fully open the valve insuring a free disc movement. The disc must be in the position shown in figure B. **(NEVER CLOSED).**

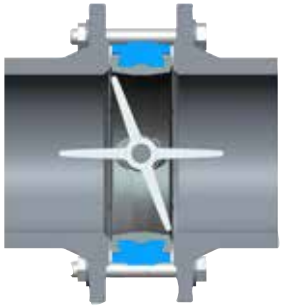

Fig.B

RIGHT

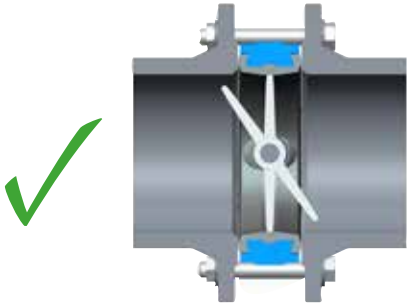

WRONG

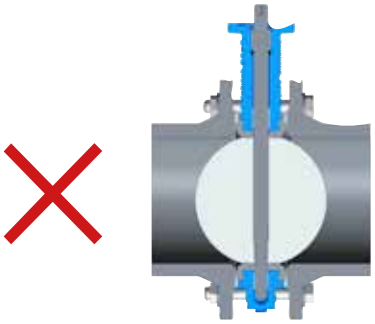

For valves up to DN-300, with clean fluids, the shaft can be either in the vertical or horizontal position, the latter position being recommended. For all other cases, installation with the shaft in horizontal position is mandatory.

WARNING
Never weld flanges to pipe with the valve installed, body can be damaged by heat.

The technical data and performance may be modified without prior notice depending on the technical advances.

INSTALLATION AND OPERATION INSTRUCTIONS

GENERAL MOUNTING PRECAUTIONS

a)	Flange faces must be flat, and will mate valve body faces when bolts are tight.
b)	NO gaskets may be installed between valve and flanges.
c)	Never install other elements with elastic raised face, such as elastic sleeves, next to the valve.

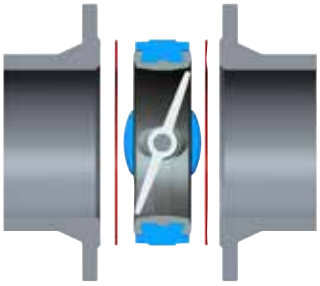

WRONG



d)	NO slip on flanges may be used in the way depicted in figure. The body will be held down incorrectly and internal distortion could impair the valve.



WRONG



IMPORTANT: For valves PN 16 the use of welding neck or slip on flanges welded with the pipe end flushed with the flange face is essential as depicted in figure.

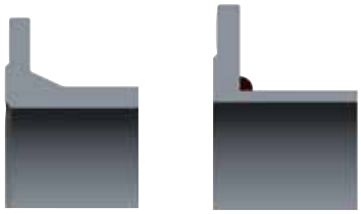

The technical data and performance may be modified without prior notice depending on the technical advances.

HYDRAULIC DATA

FLOW COEFFICIENT Kv

It is defined as the water flow rate (in m^3/h), at a temperature of 16 °C, flowing through a valve with a pressure drop of 1 bar.

It measures the capacity of a valve to allow a fluid to flow through it.

Knowing the flow coefficient Kv of a valve and the flow rate passing through it, the pressure drop (head loss) experienced by the valve can be calculated.

The greater the opening of a valve, the higher the Kv value. As a valve is opening, the Kv increases until the valve is fully open, where it reaches its maximum Kv value, or 100% open Kv (see right-hand column of the table).

FLOW COEFFICIENT Kv RELATIVE TO DISC OPENING ANGLE (100% AT 90º OPENING)

DN		OPENING ANGLE									
mm	inches	10°	20°	30°	40°	50°	60°	70°	75°	80°	90° / 100%
40	1 1/2"	1	3	7	14	21	31	59	86	93	97
50	2"	2	5	11	16	27	44	69	101	104	114
65	2 1/2"	3	8	19	27	45	74	117	173	177	194
80	3"	5	13	29	42	69	115	181	266	272	299
100	4"	8	21	49	84	138	228	360	530	541	595
125	5"	13	35	81	143	234	389	615	902	922	1.013
150	6"	20	53	122	221	362	600	950	1.394	1424	1.566
200	8"	37	100	228	352	627	1.036	1.641	2.406	2.460	2.703
250	10"	59	160	366	598	1.066	1.765	2.793	4.097	4.189	4.603
300	12"	86	232	531	924	1.647	2.726	4.315	6.330	6.472	7.112
350	14"	118	317	724	1.358	2.353	3.802	5.884	8.056	8.599	9.052
400	16"	157	422	966	1.810	3.138	5.069	7.845	10.741	11.466	12.069
450	18"	204	549	1.255	2.353	4.079	6.590	10.198	13.964	14.905	15.690
500	20"	260	700	1.600	3.000	5.200	8.400	13.000	17.800	19.000	20.000
600	24"	377	1.015	2.320	4.350	7.540	12.180	18.850	25.810	27.550	29.000
700	28"	532	1.433	3.276	6.142	10.647	17.198	26.616	36.444	38.901	40.948
800	32"	702	1.889	4.317	8.095	14.031	22.666	35.078	48.029	51.267	53.966
900	36"	910	2.450	5.600	10.500	18.200	29.400	45.500	62.300	66.500	70.000
1000	40"	1.143	3.078	7.034	13.190	22.862	36.931	57.155	78.259	83.534	87.931
1200	48"	1.690	4.550	10.400	19.500	33.800	54.600	84.500	115.700	123.500	130.000
1400	56"	2.405	6.475	14.800	27.750	48.100	77.700	120.250	164.650	175.750	185.000
1500	60"	2.584	6.955	15.897	29.806	51.664	83.457	125.711	176.849	188.772	198.707
1600	66"	2.970	7.996	18.276	34.267	59.397	95.948	148.491	203.319	217.026	228.448

The above indicated values are the flow coefficients Kv related to the disc opening angle.

These values are for guidance, as they have been calculated under ideal operating conditions.

BELGICAST centric butterfly valves are designed as isolation valves. However, they can be used for regulation within the operating window hereabove stated (opening angle from 30° to 75°).

For further information, please do not hesitate to contact us.

The technical data and performance may be modified without prior notice depending on the technical advances.

HYDRAULIC DATA

FLOW COEFFICIENT Cv

Equivalent to Kv, expressed in imperial units: US gallons per minute (gpm) and a pressure drop of 1 psi.

$$Cv = Kv \cdot 1,16$$

PRESSURE DROP

Calculation formula for liquids:

$$\Delta p = \left(\frac{Q}{Kv}\right)^2 \cdot SG$$

Δp Pressure drop across the valve in bar
Q Flow rate in m^3/h
SG Relative density or specific gravity (1 for water)
Kv Valve flow coefficient in m^3/h

FLOW VARIATION CURVES

Flow coefficients (Cv or Kv) related to the opening angle of the disc.

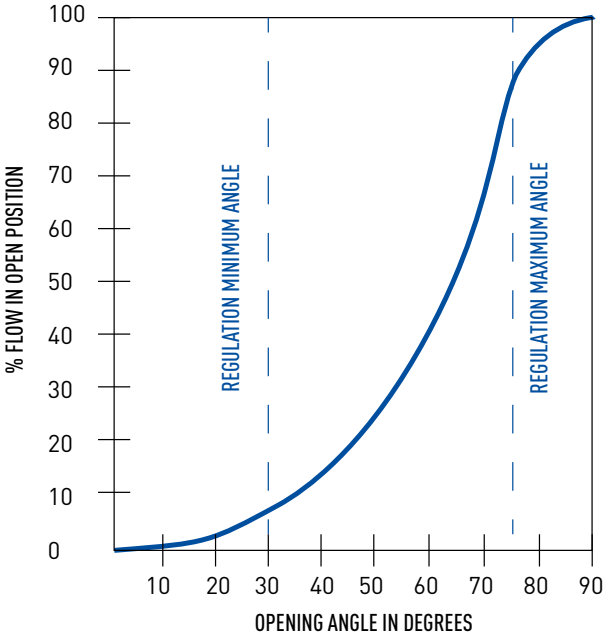

CAVITATION POTENTIAL QUANTIFIED

Cavitation occurs when a liquid falls below its vapor pressure and turns into gas. When it later recovers the pressure above the vapor pressure and returns to the liquid state, the gas bubbles collapse and release a large amount of energy in the form of small shock waves, significantly damaging system components.

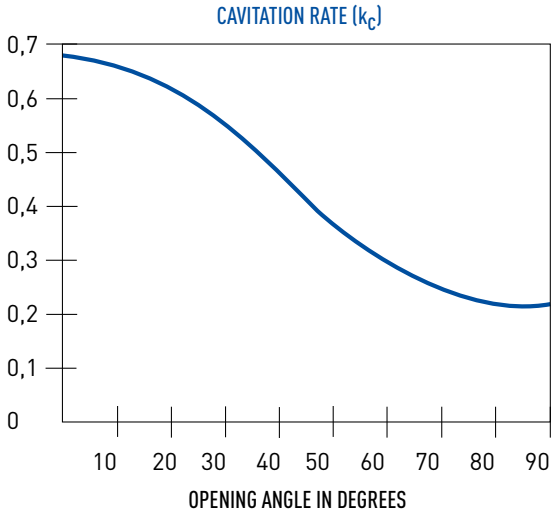

$$k_c = \frac{\Delta p}{(p_1 - p_v)}$$

Δp Pressure drop across the valve in bar
p_1 Absolute pressure immediately upstream of the valve in bar
p_v Absolute vapor pressure in bar
k_c Cavitation index. This value predicts the beginning of cavitation related damage for a particular valve.

When the following relation applies, there is no cavitation inside the valve:

$$\Delta p < k_c \cdot (p_1 - p_v)$$

The technical data and performance may be modified without prior notice depending on the technical advances.

TORQUE VALUES

DN	MAXIMUM WORKING PRESSURE (BAR)		TOP FLANGE
	10	16	
	Torque* (Nm) - (safety factor included) Standard disc		
40	13	16	F05 - #11
50	18	23	F05 - #11
65	27	34	F05 - #11
80	36	47	F05 - #11
100	55	70	F05 - #11
125	73	92	F07 - #14
150	120	151	F07 - #14
200	216	273	F07 - #17
250	364	459	F10 - #22
300	553	761	F12 - #22
350	572	650	F12 - #22
400	585	710	F12 - #27
450	1.430	1.900	F14 - #36
500	1.850	2.600	F14 - #36
600	1.910	2.800	F16 - #46
700	4.420	6.240	F25 - Ø80
800	4.040	5.970	F25 - Ø72
900	7.800	10.140	F25 - Ø95
1000	6.500	7.800	F25 - Ø72
1100	12.350	19.110	F25 - Ø80
1200	11.700	19.500	F30 - Ø100
1400	32.240	43.524	F35 - Ø120
1500	39.000	54.600	F35 - Ø120
1600	70.000	-	F40 - Ø150

The above indicated values are the result of measurements done with clean water at room temperature.
They are valid for General Service applications.
In case of Severe Service applications, it would be necessary to increase the values with an extra safety factor. Please consult us in these cases.

Characteristic	General Service	Severe Service (*)
Media Type	Water and lubricating media without deposits	Air, dry, non lubricating media, media with deposits, etc
Liner Material	EPDM, NBR	VITON, SILICONA
Media Temperature	50°C max.	From 50°C up to the temperature limit of the liner material
Frequency of valve operation	Once every 12 weeks or more frequently	Infrequently, no operation during long periods

(*): it could be considered Severe Service if one of the cases occurs. In case of doubt, please consult us.

The technical data and performance may be modified without prior notice depending on the technical advances.

CENTRIC BUTTERFLY VALVES

DESALINATION SOLUTION

One of the main problems that engineering companies face is the exposure of commonly handled long-life equipment to high salinity fluid, such as seawater and brine, reaching TDS levels higher than 50.000ppm. BELGICAST offers a multiple options for these materials, such as discs coated with **HALAR ECTFE**, which offers the **best combination of low permeability and good chemical resistance** with a very smooth surface.

For High pressure valves and steel wetted parts, BELGICAST provides high quality **SUPER DUPLEX** with Pitting Resistance Equivalent Number (PREN = Cr(%) + 3,3 x (Mo+0.5W)(%) + 16 x N(%)) > 40 and CF > 35.



MATERIALS OF CONSTRUCTION

- **Body:** GGG40 + 250 micron epoxy coating
- **Disc:** Super Duplex ASTM A890 Gr.5A (PREN>40)
  A351 CF8M (316)
  Halar® coated disc
- **Liner:** EPDM
- **Shaft:** AISI 420, AISI 316/316L, DUPLEX
- Other materials on request.

DESIGN DATA

- **Flange installation:** EN 1092 PN 10/16 ANSI #150 (other options available)
- **Face to face:** EN 558 Series 20
- **Design:** EN 593, EN 1047, API 609
- **Testing:** EN 12266-1, API 598

TECHNICAL DATA

- **Design acc. to EN593 and EN 1074-2**
- **Size:** From DN 32 (1") to DN 2000 (80")
- **Nominal Pressure (PN):** PN 10 to PN 16
- **Rating:** PN 10 / 16 / 25 / ANSI-150 / ANSI-300
- **Connections:** Wafer, Lug, Flanged
- **Functions:** ON/OFF and regulating
- **Medium Temperature:**

Standard up to 60°C (other possibility according to liner material)

MARKETS

Desalination





PNEUMATIC ACTUATORS WITH REQUESTED **EQUIPMENT** (POSITION INDICATOR, EMERGENCY HANDWHEEL, POSITIONER,...). **STAINLESS STEEL** GEARBOXES AVAILABLE.



BELGICAST BUTTERFLY VALVES COMPLIES WITH **C5M CORROSION PROTECTION LEVEL** FOR VERY HIGH CORROSIVE ENVIRONMENTS.

The technical data and performance may be modified without prior notice depending on the technical advances.

ACTUATION METHODS

BELGICAST offers a wide variety of actuation methods allowing to choose the best option for each installation.
Possible actuation methods:

- Lever
- Gearbox with handwheel
- Electric actuator quarter-turn
- Electric actuator multi-turn
- Pneumatic actuator single-acting
- Pneumatic actuator double-acting

OPERATION WITH LEVER



LEVER

- Made of aluminium
- Can be locked in any position

OPERATION WITH HANDWHEEL - STANDARD GEARBOX



GEARBOX TYPE 3D

- With cast iron handwheel
- Stainless steel input shaft
- Clockwise closing
- IP65 protection
- Visual position indicator



GEARBOX TYPE EG

- With cast iron handwheel
- Stainless steel input shaft
- Clockwise closing
- IP68 protection
- Visual position indicator

OPERATION WITH HANDWHEEL - OPTIONAL GEARBOXES

GEARBOX TYPE AUMA GS

- With stainless steel handwheel
- Stainless steel input shaft
- Clockwise closing
- IP68 protection
- Sealed visual position indicator



GEARBOX TYPE PRO-GEAR Q

- With welded handwheel
- Stainless steel input shaft
- Stainless steel fasteners
- Clockwise closing
- IP68 protection
- Sealed position indicator
- -25°C to 110°C
- Our standard for desalination applications



The technical data and performance may be modified without prior notice depending on the technical advances.

OPERATION WITH ELECTRIC ACTUATOR

AUMA ELECTRIC ACTUATOR

- Multi-turn SA/SAR, quarter-turn SQ
- On/Off duty, S2 - 15 min
- 2 limit switches
- 2 torque switches
- Emergency handwheel for manual operation
- 400V-50Hz three-phase supply (alternatives on request)
- Coating protection:
  SQ and SA electric actuators: KS type
  GS GEARBOXes: KS type up to model GS80.3, rest of models KN type
- Heating resistance to avoid condensation
- IP68 protection
- Protección IP68

DREHMO ELECTRIC ACTUATOR

- Multi-turn D, quarter-turn DP
- On/Off duty, S2 - 15 min
- 2 limit switches
- 2 torque switches
- Emergency handwheel for manual operation
- 400V-50Hz three-phase supply (alternatives on request)
- Coating protection:
  Electric actuators: K3 type
  GQB GEARBOXes: C2 type
- Heating resistance to avoid condensation
- IP67 protection
- Protección IP67



OPERATION WITH PNEUMATIC ACTUATORS

ACTUATECH SINGLE ACTING PNEUMATIC ACTUATOR

- Scotch yoke design
- Air supply pressure of 5,6 bar
- 1/4 turn
- Fail to close or fail to open

ACTUATECH DOUBLE ACTING PNEUMATIC ACTUATOR

- Scotch yoke design
- Air supply pressure of 6 bar
- 1/4 turn
- Optional emergency handwheel for manual operation



The technical data and performance may be modified without prior notice depending on the technical advances.



BELGICAST is the undisputed Number One for water transport and water flow control. BELGICAST has the best solutions available in the fields of water and energy management as well as for industrial and communal applications. We have numerous products for comprehensive solutions for the whole water cycle – from hydrants, butterfly valves and knife gate valves through to needle valves. Our experience, innovative technology, global expertise and individual consultation processes form the basis for developing long-term solutions for the efficient treatment of the vitally important resource "water".

BELGICAST
Polígono Industrial La Cruz,
Parcela P-4-1, 48196 Lezama
Bizkaia, SPAIN
PHONE +34 94 488 91 00
FAX +34 94 488 91 25
E-MAIL belgicast@belgicast.es
INTERNET www.belgicast.eu

PBR_CBV260902_GOLD_GREATGOLD_EN

Note: Information and specifications may be changed without notification at any time.
Copyright: No copying without express written permission of BELGICAST.
BELGICAST is a Registered Trademark.

BELGICAST