GATE VALVE, FLANGED, INFINITY

BC0140/184-002

F5 DN40-300 PN10/16 prepared for actuator

INFINITY represents a new generation of resilient seated gate valves, as well as boasting of the latest technological advances and unique technical features. INFINITY has been 100% designed and manufactured in Europe using high quality materials and the latest manufacturing technologies, to guarantee, to our valuable customers, an extraordinary lifetime, outstanding operability and unique safety features.

Use:

BELGICAST flanged gate valve INFINITY F5 DN40-300 PN10/16 prepared for actuator. Epoxy coating temperature range: -10°C to +50°C.

Standards:

- EN 1074 part 1 & 2
- Face-to-face dimension according to EN 558, series 15
- Flange Drilling according to EN1092-2

Test/Approvals:

- Hydraulic test according to EN 1074-1 and -2 / EN 12266
- Seat: 1.1×PN (in bar), Body: 1.5×PN (in bar).
- Listed approvals are only for general information, specific approval for each variant upon request.

Features:

- **Low operating torque:** INFINITY and its new wedge and stem technology ensures smooth functionality with outstanding low torque values.
- **Longer service life:** new guiding system for the wedge with male composite sliding skate in order to easily achievethe 2500 cycles endurance test required by European standards.
- **Low head loss:** clear way and straight bore design from in order to allow a free path without restriction of the fluid.
- **Bubble tight shut off:** new wedge design with increased thickness of the elastomer at the sealing areas to improve tightness.
- **High minimum resistant torque**: Innovative design of the thrust system for minimum strength torque that exceeds current standards.
- Made of **high quality materials** according to the relevant standards.
- Clear way and **straight bore**, so the flow is optimum with minimum head losses.
- **Replaceable packing** under pressure.
- **Wedge fully encapsulated** in elastomer for a better resistance to corrosion.
- Integral male composite sliding skate as guiding system for **easy operation** under maximum differential pressure.
- Body bonnet bolts are protected with hot melt glue.
- Stem in **stainless steel.**
- Maintenance free.
- **Rounded surfaces** of the body ensure a uniform coating and protection of the highest quality.
- **Excellent corrosion resistance: GSK**/RAL-GZ coating in standard up to DN300 with epoxy thickness of 250 microns minimum. Threadless bonnet up to DN300 that allows continuous coating.
- **Approved** by major organizations worldwide for drinking water.
- In conformity with **European standards** EN 1074-2 (annex A) and EN 1171 (category 3).
- **100% tested** according to EN 12166-1 standard.
- Supplied with **ISO top flange**



BELGICAST

The designs, materials, dimensions and specifications shown are subject to change without notice due to the continuous development of our product range.

©2026 BELGICAST

GATE VALVE, FLANGED, INFINITY

BC0140/184-002

F5 DN40-300 PN10/16 prepared for actuator

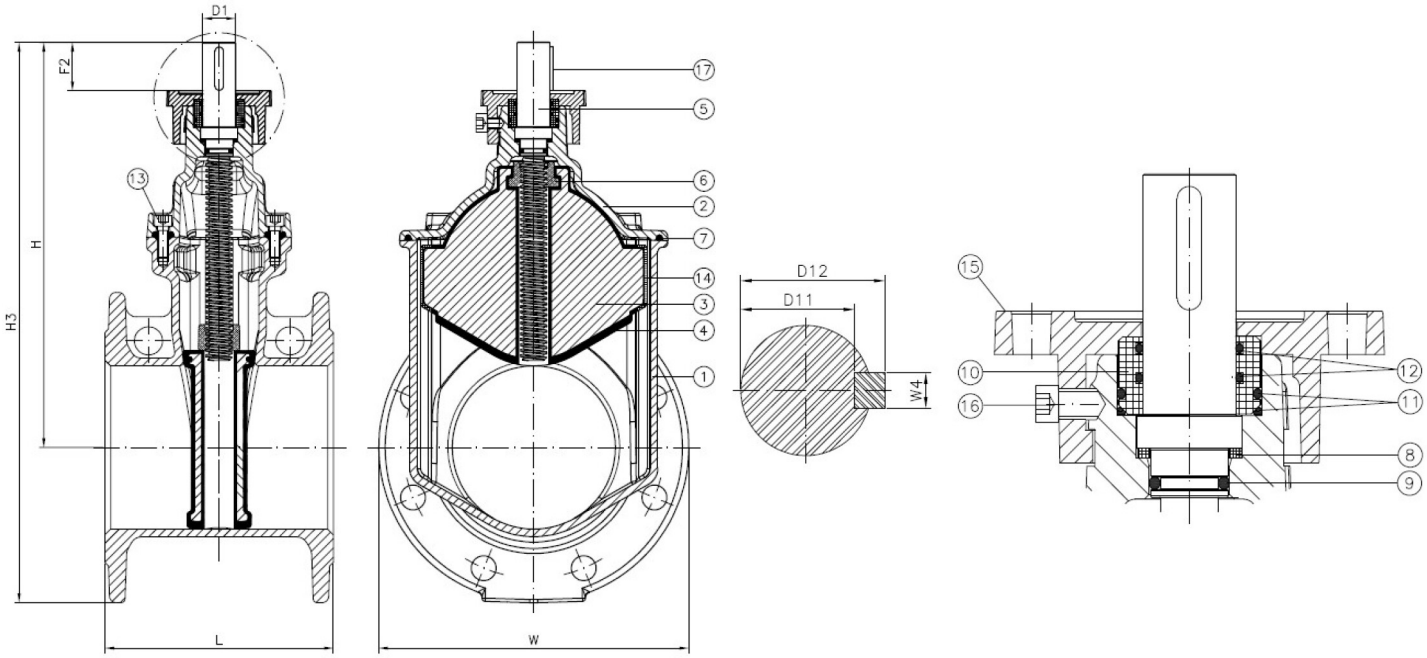

Component list:

1.	Body	Ductile iron GJS-500-7	10.	Stuffing nut	Copper alloy
2.	Bonnet	Ductile iron GJS-500-7	11.	O-ring	NBR rubber
3.	Wedge	Ductile iron GJS-500-7	12.	O-ring	NBR rubber
4.	Wedge rubber	EPDM rubber	13.	Bonnet bolt	Steel gr. 12.9
5.	Stem	Stainless steel 1.4021	14.	Wedge guide	PPS GF40
6.	Wedge lock nut	Copper alloy	15.	ISO flange	Ductile iron GJS-500-7
7.	Body-bonnet seal	EPDM rubber	16.	Bolt	Stainless steel A4
8.	Stem washer	Steel, PTFE coated	17.	Key	Steel
9.	O-ring	EPDM rubber			

Metallic components may be substituted with equivalent or higher-grade materials without prior notice, provided that this is in compliance with the approvals.

The designs, materials, dimensions and specifications shown are subject to change without notice due to the continuous development of our product range.

©2026 BELGICAST

GATE VALVE, FLANGED, INFINITY

BC0140/184-002

F5 DN40-300 PN10/16 prepared for actuator

Reference nos. and dimensions:

Reference no.	DN	PN	H	H3	L	W	F2	D1	D11	D12	W4	ISO	Theoretical
	mm	Class	mm	mm	mm	mm	mm	mm	mm	mm	mm	flange	weight/kg
RGV00072TS	40	PN16	195	270	240	150	44	20	16.7	22.7	6	F10	7.5
RGV00073TS	50	PN16	215	298	250	165	44	20	16.7	22.7	6	F10	9.1
RGV00074TS	65	PN16	245	337	270	185	44	20	16.7	22.7	6	F10	13
RGV00075TS	80	PN16	267	367	280	200	44	20	16.7	22.7	6	F10	15
RGV00076TS	100	PN16	292	402	300	220	44	20	16.7	22.7	6	F10	18
RGV00077TS	125	PN16	340	465	325	250	44.5	30	26.2	33.2	8	F10	26
RGV00078TS	150	PN16	372	515	350	285	44.5	30	26.2	33.2	8	F10	32
RGV00079TS	200	PN10	485	655	400	340	68	30	26.2	33.2	8	F10	56
RGV00080TS	200	PN16	485	655	400	340	68	30	26.2	33.2	8	F10	56
RGV00081TS	250	PN10	562	762	450	400	62.5	30	26.2	33.2	8	F14	80
RGV00082TS	250	PN16	562	762	450	400	62.5	30	26.2	33.2	8	F14	80
RGV00083TS	300	PN10	642	870	500	455	62.5	30	26.2	33.2	8	F14	116
RGV00084TS	300	PN16	642	870	500	455	62.5	30	26.2	33.2	8	F14	116

The designs, materials, dimensions and specifications shown are subject to change without notice due to the continuous development of our product range.

©2026 BELGICAST