BELGICAST CLASAR® CHECK VALVE

0250/100-002

Technology:

Non-return valve with very high dynamic response to avoid the water hammer:

- Partial opening,
- Silent running,
- Compact design,
- Virtually no wear and tear on the obturator
- Fast closing due to short obturator motion (effective protection of the valve against pressure peaks and of the pumps against flow reversal)

Design Standard: EN16767 (out of face to face)

Face to Face: Manufacturer Standard

The maximum pressures and temperatures depend on the pressure/temperature ratio, materials, size (DN) and nature of the fluid.

Temperature: -30 to +130°C

Maximum working pressure 50 bar

Body:

The design of the diffuser is the direct result of hydraulic studies and tests, carried out in renowned laboratories. It provides effective guidance for the fluid with the same flow velocity in all valve sections.

A complex part requiring a high level of quality, production of the raw parts has benn entrusted to partners recognized for their high technicality.

The sealing area is faultless, i.e. no repairs are permitted, which guarantees a homogeneous maintenance of the metallurgical properties.

Counter flange (Wafer) or **Real shell** (Double Flange Version)**:**

High quality materials.

It ensures precise guidance of the return spring.

Its careful machining guarantees the external sealing of the valve.

Obturator:

Instantaneous dynamic response thanks to its density close to the fluid and its very short run.

The hardness of the obturator takes into account the design of the sealing surfaces and conditions of use. It guarantees the maintenance of the properties of the valve's tightness over time.

Static seals and absence of rubbing thanks to the floating design of the obturator limit or eliminate the need for periodic maintenance.

Spring:

The features are calculated to guarantee optimal performance of the valve.

Its main function is to hold the valve on the sealing surfaces at zero differential pressure. It therefore avoids mixing upstream and downstream fluids.

The material used is adapted and selected according to the fluid flowing through the valve.

The spring in the standard version allows operation in systems with low line speeds, but also in systems with high deceleration (smooth operation).



Body type:



Wafer (DN80-500)



Double flange (DN600 – 1800)

BELGICAST
WATER IS LIFE

The designs, materials and specifications shown are subject to change without notice due to the continuous development of our product range.

© 2026 BELGICAST

BELGICAST CLASAR® CHECK VALVE

0250/100-002





Part List:

No.	DESIGNATION	MATERIAL*		COATING*
1	Body	Ductile iron	EN-JS1020 (GJS400-15)	Epoxy
		Austenitic cast iron	EN-JS3011/A439 D-2B	
		Stainless steel	1.4408 /A351 CF8M	
		Super Duplex	1.4469 PREN40 /A995 5A	
2	Counter Flange (2A) or Rear Shell (2B)	Ductile iron	EN-JS1020 (GJS400-15)	Epoxy
		Austenitic cast iron	EN-JS3011/A439 D-2B	
		Stainless steel	1.4408/A351 CF8M	
		Super Duplex	1.4469 PREN40 /A995 5A	
3	Obturator		Polyurethane	
			PTFE	
4	Spring	Stainless steel	1.4310 (equiv. AISI302)	
			AISI316	
			INCONEL X750	
5	O-Ring		EPDM	

(*) Others on request

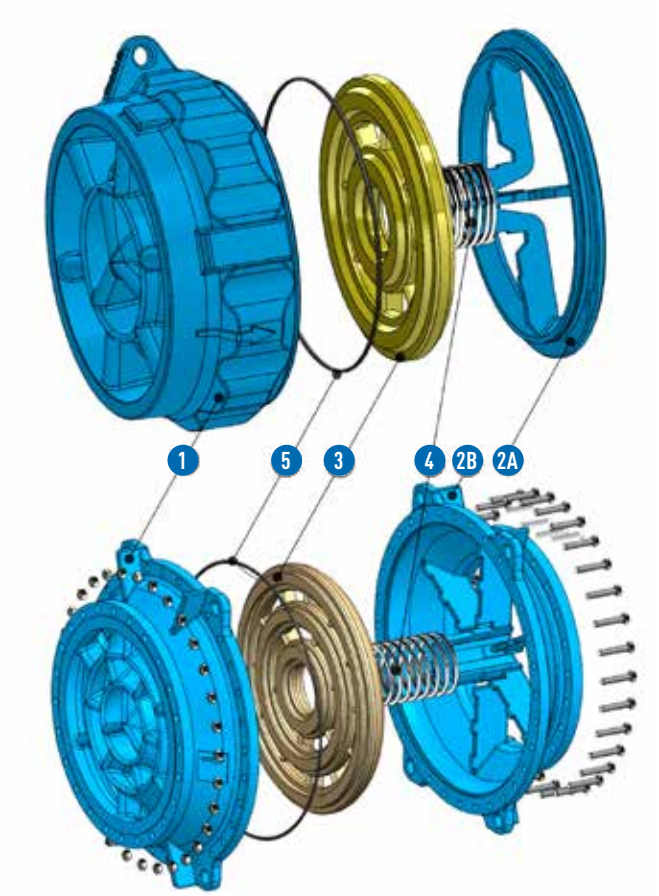

The designs, materials and specifications shown are subject to change without notice due to the continuous development of our product range.

Dynamics Charecteristics

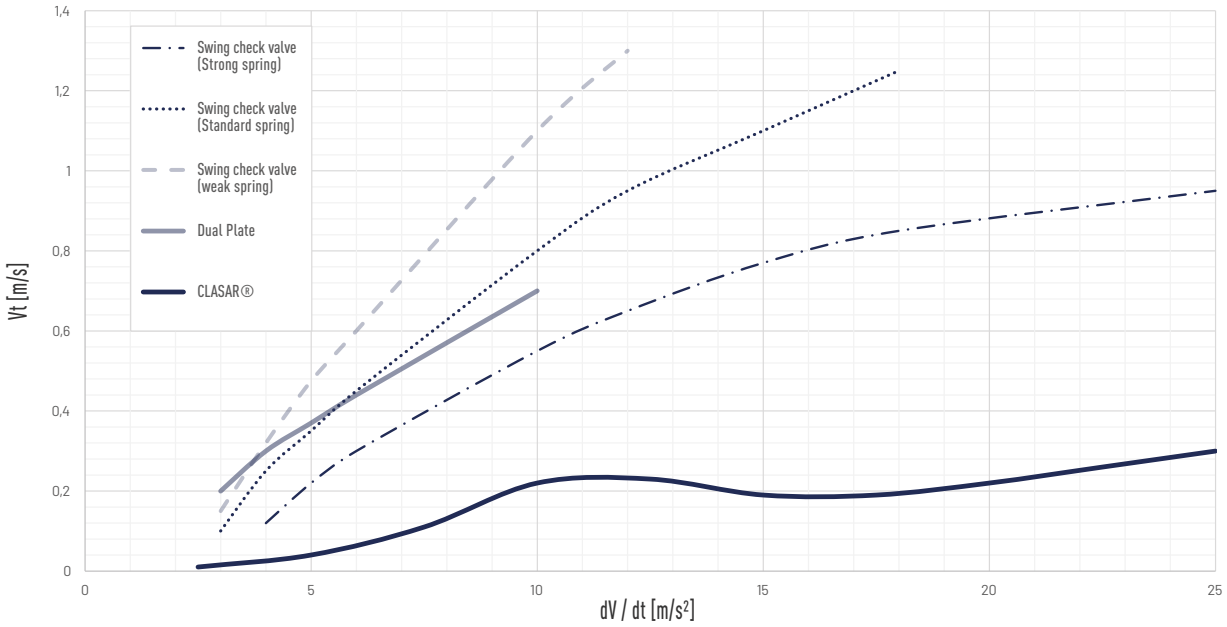

Deceleration (m/s²)

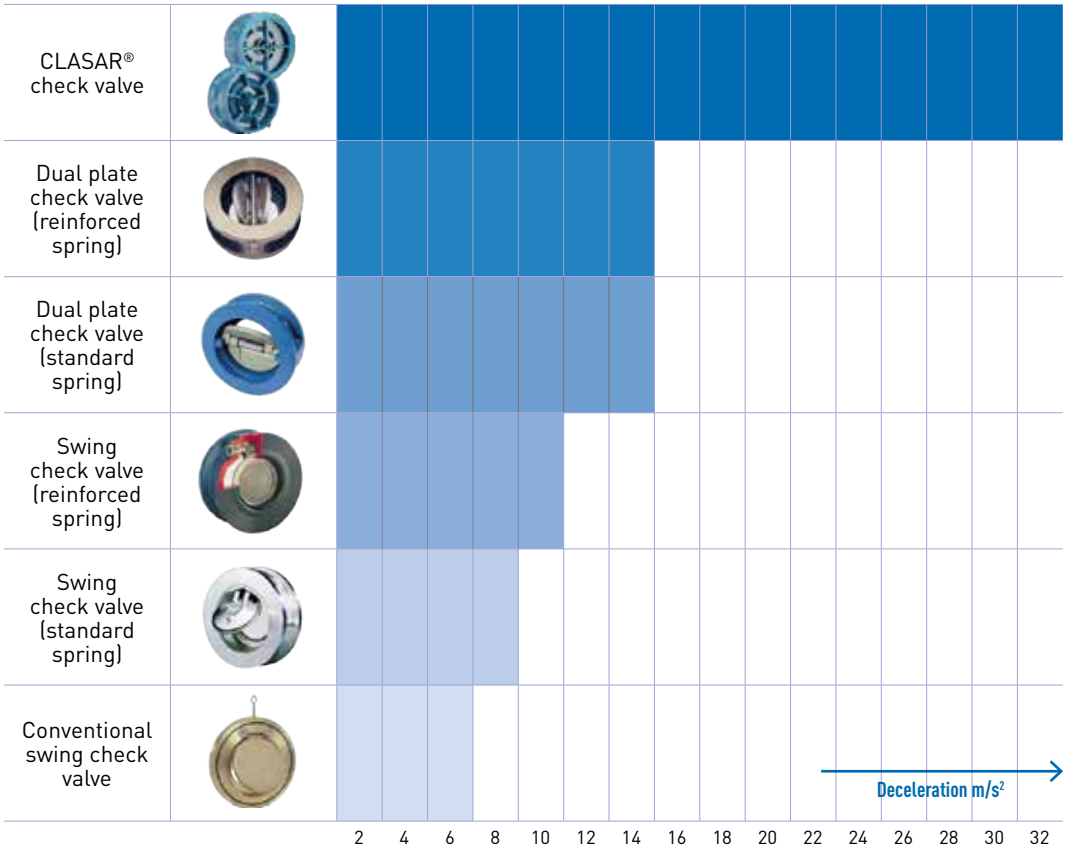

Range of use of the obturators

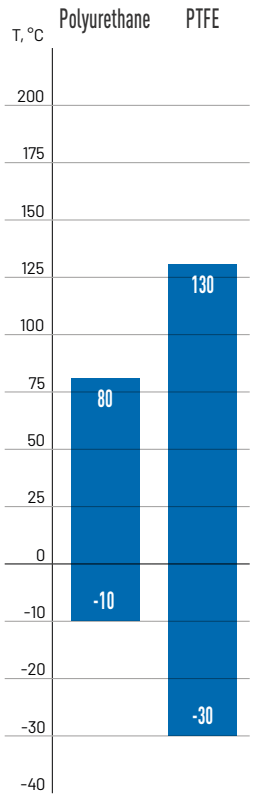

The designs, materials and specifications shown are subject to change without notice due to the continuous development of our product range.

TDS_CHV260924_Clasar_EN

BELGICAST
Polígono Industrial La Cruz, parcela P-4-1, 48196 Lezama, Bizkaia
T +34 94 488 91 00 · belgicast@belgicast.es · www.belgicast.eu

BELGICAST WATER IS LIFE