BV-05-38R BALL CHECK VALVE THREADED ENDS

0258/250-001

DN32-65, 10 bar

The ball check valve is simple and compact, and commonly used to protect wastewater pumps where economy is important. BELGICAST provides a range of threaded and flanged ball check valves for sewage water and loaded or viscous fluids. This check valve features a ductile iron body with an internal design that guides a rubber-coated ball out of the seat by flow pressure, returning it when the flow reverses.

Product description:
Ball check valve, BV-05-38R model with threaded ends

Standards:
- BSP thread profile according to ISO 228-1
- Sealing: class A according to standard ISO 5208

Features:
- Maintenance: Easy internal access due to removable bonnet or seat
- Head Loss: Low head loss due to full bore design
- Robust construction: Ball fully encapsulated in moulded NBR, epoxy coating for corrosion protection, stainless steel A2 bolting
- Self-cleaning: Rolling motion of the ball ensures auto-cleaning of the ball and internal body

Technical Specifications:
Threaded type: 1 ¼" to 2 ½"
Maximum working pressure: 10 bar
Medium temperature range: -10 °C up to +50 °C



BELGICAST
WATER IS LIFE

The designs, materials and specifications shown are subject to change without notice due to the continuous development of our product range.

© 2026 BELGICAST

BV-05-38R BALL CHECK VALVE THREADED ENDS

DN32-65, 10 bar

0258/250-001

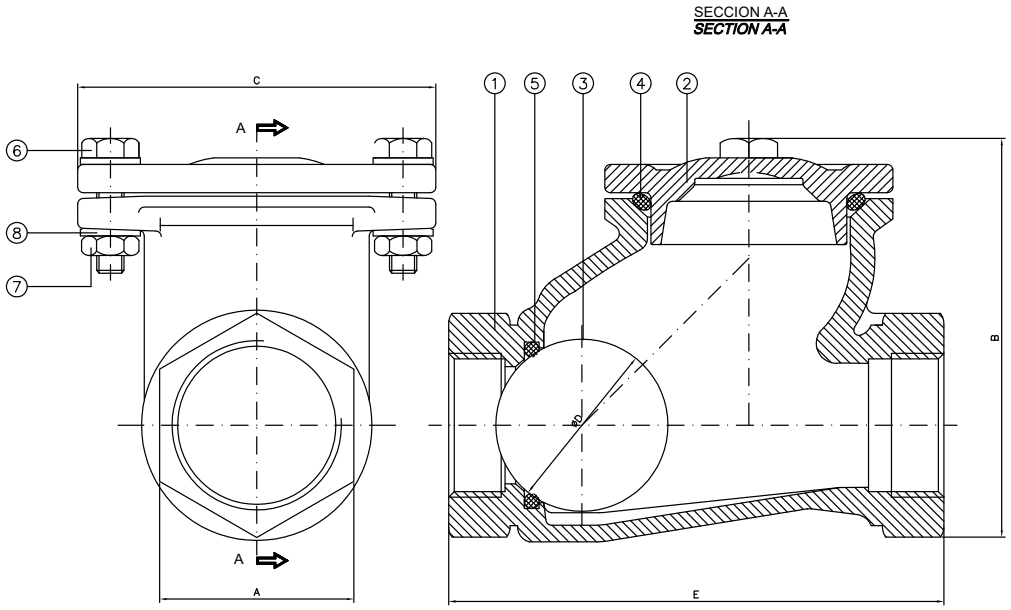

Components:

1	Body	GJS 400-15
2	Bonnet	GJS 400-15
3	Ball	Phenolic resin
4	Body bonnet gasket	NBR
5	Seat gasket	NBR
6	Bolt	AISI 304 (A2)
7	Nut	AISI 304 (A2)
8	Washer	AISI 304 (A2)

References and dimensions:

REFERENCE	DN (mm)	DN (inches)	A (mm)	B (mm)	C (mm)	∅D (mm)	E (mm)	WEIGHT (Kg)
101703211R	32	1 1/4"	50	105	106	48,1	135	2,4
101704011R	40	1 1/2"	60	115	112	50,8	142	2,8
101705011R	50	2"	75	146	136	62,2	175	3,7
101706511R	65	2 1/2"	90	170	155	76,25	198	6,3

The technical data and performance may be modified without prior notice depending on the technical advances.
Components may be replaced with materials of equivalent or superior quality without prior notice.

BELGICAST
Polígono Industrial La Cruz, parcela P-4-1, 48196 Lezama, Bizkaia
T +34 94 488 91 00 · belgicast@belgicast.es · www.belgicast.eu

BELGICAST
WATER IS LIFE