BV-05-38 BALL CHECK VALVE FLANGED ENDS

0258/240-001

DN40-400

The ball check valve is simple and compact, and commonly used to protect wastewater pumps where economy is important. BELGICAST provides a range of threaded and flanged ball check valves for sewage water and loaded or viscous fluids. This check valve features a ductile iron body with an internal design that guides a rubber-coated ball out of the seat by flow pressure, returning it when the flow reverses.

Product description:
Ball check valve, BV-05-38 model with flanged ends

Standards:

- Flanges drilling according to standard EN 1092-2 and ISO 7005-2: ISO PN 10 or 16 up to DN 200, ISO PN 10 from DN 250 to DN 400 (drilling ISO PN16 upon request).
- Face to face dimensions for flanged type: according to standards EN 558-1 series 48 and ISO 5752 series 48
- Sealing: class A according to standard ISO 5208

Features:

- Maintenance - Easy internal access due to removable bonnet or seat
- Head loss - Low head loss due to full bore design
- Robust construction – Ball fully encapsulated in moulded NBR, corrosion protection thanks to epoxy coating, bolting in stainless steel.
- Self-cleaning – Thanks to the rolling ball, movement will ensure auto-cleaning of the ball and internal body
- Different possible installations – Horizontal flow, vertical flow upwards.

- Flanged type: DN 40 up to 400
- Working pressures: 16 bar up to DN 200 & 10 bar for DN 250 to DN 400
- Medium Temperature: -10 °C up to +50 °C



BELGICAST
WATER IS LIFE

The designs, materials and specifications shown are subject to change without notice due to the continuous development of our product range.

© 2026 BELGICAST

BELGICAST BV-05-38 BALL CHECK VALVE FLANGED ENDS

DN40-400

0258/240-001

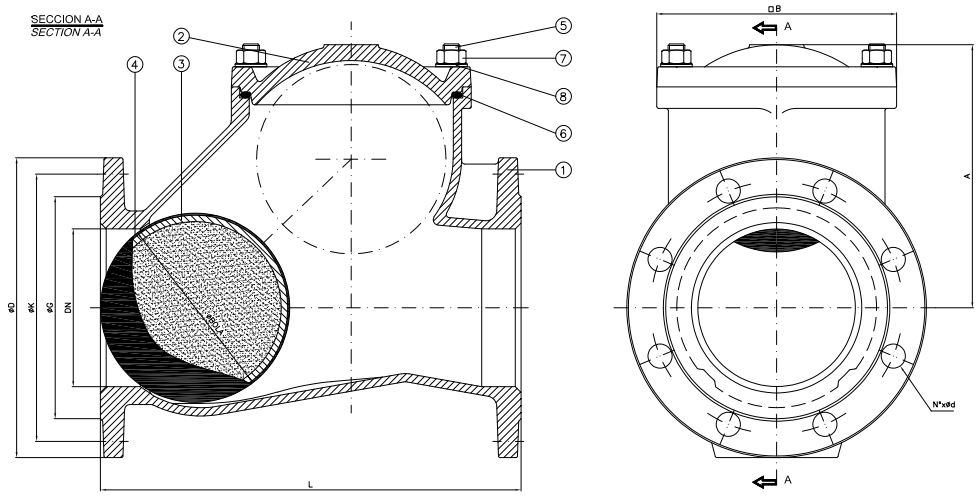

Components:

1	Body	GJS 400-15
2	Bonnet	GJS 400-15
3	Ball	DN40-150 Steel DN200-400 GJS 400-15
4	Ball coating	NBR
5	Bolt	DN40-200 Stainles steel A4 DN250-400 Stainles steel A2
6	Body bonnet gasket	NBR
7	Nut	DN40-200 Stainles steel A4 DN250-400 Stainles steel A2
8	Washer	DN40-200 Stainles steel A4 DN250-400 Stainles steel A2

References and dimensions:

REFERENCE	DN	FLANGE DRILLING	MAX. WORKING PRESSURE (PFA)	ØD (mm)	ØG (mm)	ØK (mm)	N°xd	L (mm)	A (mm)	B (mm)	ØBALL (mm)	WEIGHT (Kg)
CHV00498TS	40	PN10/16	16 bar	150	88	110	4x19	180	92	102	62	6
CHV00499TS	50	PN10/16	16 bar	165	99	125	4x19	200	97	102	62	8
CHV00500TS	65	PN10/16	16 bar	185	118	145	4x19	240	122,5	124	80	11
CHV00501TS	80	PN10/16	16 bar	200	132	160	8x19	260	142,5	139,5	96	15
CHV00502TS	100	PN10/16	16 bar	220	156	180	8x19	300	185	162	121	20
CHV00503TS	125	PN10/16	16 bar	250	184	210	8x19	350	208,5	203	149	30
CHV00504TS	150	PN10/16	16 bar	285	211	240	8x23	400	151,5	228	180	43
CHV00505TS	200	PN10	16 bar	340	266	295	8x23	500	317,5	313	245	78
CHV00506TS	200	PN16	16 bar	340	266	295	12x23	500	317,5	313	245	78
CHV00507TS	250	PN10	10 bar	400	319	350	12x23	600	481	414	318	140
CHV00508TS	250	PN16	10 bar	400	319	355	12x28	600	481	414	318	140
CHV00509TS	300	PN10	10 bar	455	370	400	12x23	700	545	460	364	213
CHV00510TS	300	PN16	10 bar	455	370	410	12x28	700	545	460	364	213
CHV00511TS	350	PN10	10 bar	520	429	460	16x23	850	657,5	596	420	305
CHV00512TS	350	PN16	10 bar	520	429	470	16x28	850	657,5	596	420	305
CHV00520TS	400	PN10	10 bar	580	480	515	16x28	1100	696	690	490	474
CHV00521TS	400	PN16	10 bar	580	480	525	16x31	1100	696	690	490	474

The technical data and performance may be modified without prior notice depending on the technical advances.
Components may be replaced with materials of equivalent or superior quality without prior notice.

BELGICAST
Polígono Industrial La Cruz, parcela P-4-1, 48196 Lezama, Bizkaia
T +34 94 488 91 00 · belgicast@belgicast.es · www.belgicast.eu

BELGICAST
WATER IS LIFE