B6 50 PREMIUM ACS SWING CHECK VALVE

DN50-300, PN10-16, flanged ends

0251/120-001
0251/120-002

Check Valve is designed to protect your pumps and network against flow inversion. BELGICAST provides a wide range of check valves to meet the many factors that determine the choice of a design.
These selection factors can lead you to choose the oldest and most common type: the swing check valve. For drinking or filtered water, BELGICAST Swing Check Valves are designed to provide a reliable, easy and long-lasting solution.

Product description:
B6 50 premium ACS swing check valve, working pressure 16 bar - without counterweight (option with counterweight)

Standards:

- Seating: class A according to standard EN 12266-1.
- Face-to-face dimensions according to standards EN 558-1 Series 48 and ISO 5752 Series 48.
- Flange drilling according to standards EN 1092-2 and ISO 7005-2: ISO PN 10 or 16.

Features:

- Reliable water tightness - Spherical trunnion to provide a self-centring effect of the valve disc in the body seat
- Robust design - Corrosion-proof internal components for a long lifetime. Lubricated bearings for guiding of the turning shaft and low friction
- Easy maintenance - Complete dismantling of the bonnet and closing sub-assembly due to the shaft located in the bonnet
- Low head loss and opening on low differential of pressure – Provided by an efficient design. The body and bonnet contribute to a 93% free passage of the fluid. The internal sub-assembly is also optimized to achieve a prompt reaction of the check valve opening. Finally lubricated bearings in copper alloy bring, at the same time, a perfect guidance of the turning shaft and a low coefficient of friction.
- Stainless steel internal parts (shaft, seat, and flap) ensure a long service life and lower operational costs.
- Removable bonnet and internal parts for easy maintenance, without removing the check valve from the pipe. The bonnet holding the complete internal sub-assembly can be dismantled from the body for direct and simple access to various components
- Horizontal or upward vertical installation are possible.
- Perfect self-centrinG - The ball-shaped trunnions enable self-centring of the valve disc in the housing seat, which results in a permanently adaptable seal. This ensures a precise and fault-free operation of the non-return valve, even in case of low back pressure.
- Ideal opening angle - The 93% opening value guarantees an extremely low zeta value (coefficient of resistance), a head loss of less than eight m bar in the fully openened position and therefore enables economic operation of the valve.
- Blue RAL 5015 epoxy coating
- Medium Temperature: up to 50 °C
- Maximum speed: 5 m/s (working pressure 16 bar).
- Options: shaft protruding on both sides, limit switch, by-pass from DN 80 to DN 300, Viton gasket, Internal parts in stainless steel 316, lever and counterweight.



Version without counterweight
(0251/120-001)



Version with counterweight
(0251/120-002)

BELGICAST

The technical data and performance may be modified without prior notice depending on the technical advances.

© 2026 BELGICAST

B6 50 PREMIUM ACS SWING CHECK VALVE

DN50-300, PN10-16, flanged ends

0251/120-001
0251/120-002

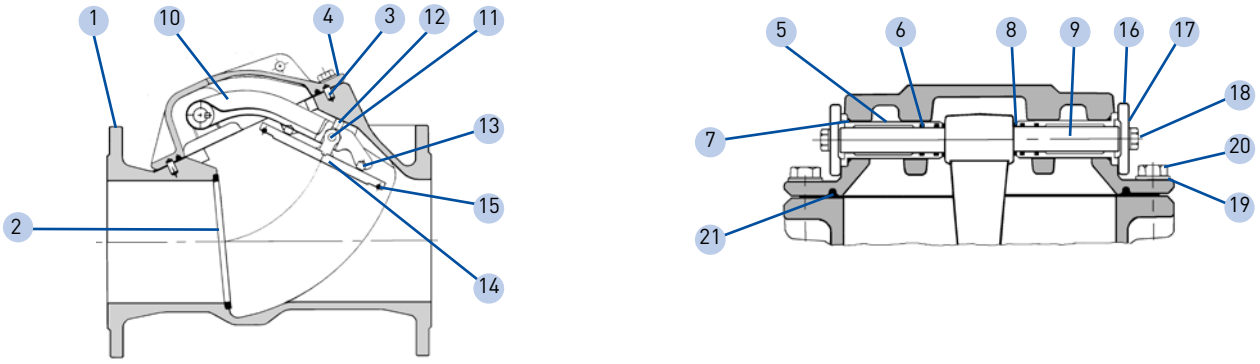

Swing check valve without weight-loaded lever

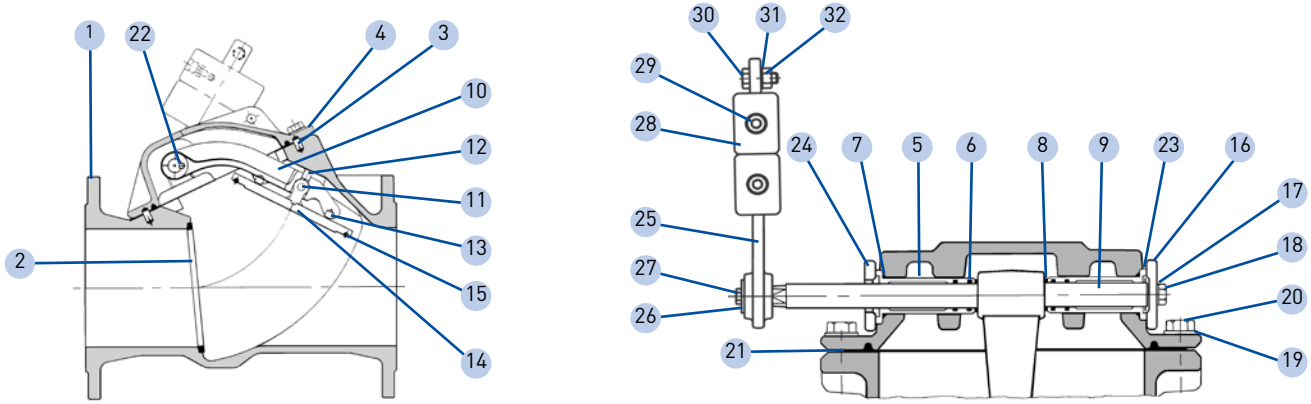

Swing check valve with weight-loaded lever on left side

Components:

1	Body	Ductile iron EN-GJS-400-15
2	Seat	Stainless steel 304
3	Centring pin	Stainless steel 316Ti
4	Bonnet	Ductile iron EN-GJS-400-15
5	Bearing	Copper alloy
6	O-ring	NBR rubber
7	O-ring	NBR rubber
8	Bush	Polyacetal / POM
9	Shaft	Stainless steel 420
10	Clapper arm	Stainless steel 304
11	Pin	Stainless steel 430F
12	Buffer	NBR rubber
13	Buffer	NBR rubber
14	Flap	Stainless steel 304
15	Resilient valve disc	NBR rubber
16	Blind flange	Stainless steel 304
17	Washer	Stainless steel A2
18	Screw	Stainless steel A2
19	Washer	Stainless steel A2
20	Screw	Stainless steel A2
21	Body/bonnet gasket	NBR rubber
	With weight-loaded lever:	
22	Key	Stainless steel 316Ti
23	Safety ring	Stainless steel A2
24	Shaft flange	Stainless steel 304
25	Lever arm	Ductile iron EN-GJS-500-7
26	Washer	Stainless steel A2
27	Screw	Stainless steel A2
28	Weight	Cast iron / EN-GJL-250
29	Screw	Stainless steel A2
30	Screw	Stainless steel A2
31	Washer	Stainless steel A2
32	Nut	Stainless steel A2

The technical data and performance may be modified without prior notice depending on the technical advances.
Components may be replaced with materials of equivalent or superior quality without prior notice.

B6 50 PREMIUM ACS SWING CHECK VALVE

DN50-300, PN10-16, flanged ends

0251/120-001
0251/120-002

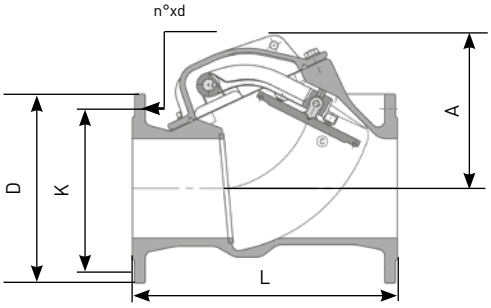

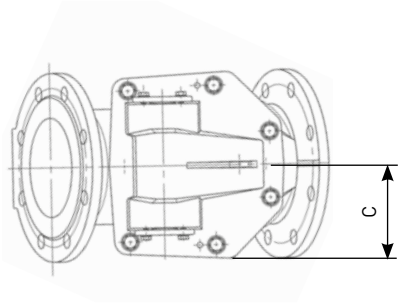

Swing check valve without weight-loaded lever

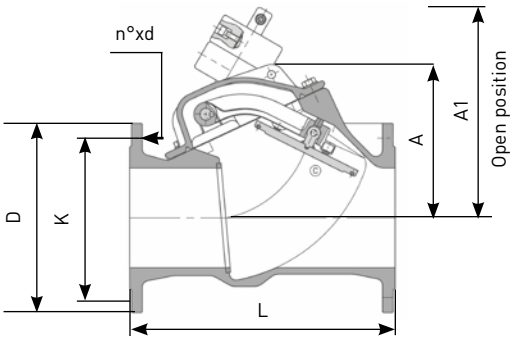

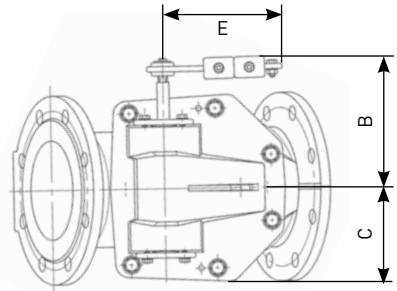

Swing check valve with weight-loaded lever on left side

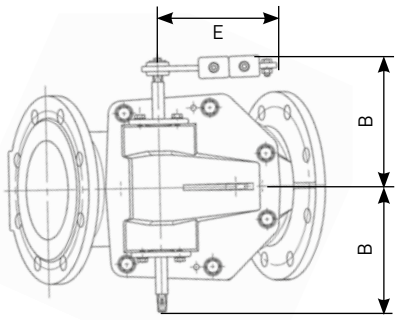

Swing check valve with weight-loaded lever on left side, and shaft protruding on both sides

References and dimensions:

	REFERENCE	DN	ISO PN	D (mm)	K (mm)	n°xd	L (mm)	A (mm)	A1 (mm)	B (mm)	C (mm)	E (mm)	Weight (Kg)	By-pass DN/weight (mm/Kg)
without weight-loaded lever	042650	50	10/16	165	125	4x19	200	105	226	131	74	170	10	-
	042715	65	10/16	185	145	4x19	240	105	226	131	74	180	12	-
	042815	80	10/16	200	160	8x19	260	145	264	170	170	180	21	15/1.1
	042905	100	10/16	220	180	8x19	300	200	264	170	170	180	24	20/1.5
	043005	125	10/16	250	210	8x19	350	220	317	195	140	180	40	20/1.5
	043105	150	10/16	285	240	8x23	400	230	317	195	140	180	46	20/1.5
	043205	200	10	340	295	8x23	500	300	391	265	185	230	75	25/1.7
	043215	200	16	340	295	12x23	500	300	391	265	185	230	75	25/1.7
	043305	250	10	400	350	12x23	600	385	490	355	245	230	148	25/1.7
	043315	250	16	400	355	12x28	600	385	490	355	245	230	148	25/1.7
	043405	300	10	455	400	12x23	700	410	500	355	245	250	169	32/2.0
	043415	300	16	455	410	12x28	700	410	500	355	245	250	169	32/2.0
with weight-loaded lever	044640	50	10/16	165	125	4x19	200	105	226	131	74	170	10	-
	044650	65	10/16	185	145	4x19	240	105	226	131	74	180	12	-
	044660	80	10/16	200	160	8x19	260	145	264	170	170	180	21	15/1.1
	044665	100	10/16	220	180	8x19	300	200	264	170	170	180	24	20/1.5
	044670	125	10/16	250	210	8x19	350	220	317	195	140	180	40	20/1.5
	044675	150	10/16	285	240	8x23	400	230	317	195	140	180	46	20/1.5
	044680	200	10	340	295	8x23	500	300	391	265	185	230	75	25/1.7
	044680	200	16	340	295	12x23	500	300	391	265	185	230	75	25/1.7
	044680	250	10	400	350	12x23	600	385	490	355	245	230	148	25/1.7
	044680	250	16	400	355	12x28	600	385	490	355	245	230	148	25/1.7
	044680	300	10	455	400	12x23	700	410	500	355	245	250	169	32/2.0
	044680	300	16	455	410	12x28	700	410	500	355	245	250	169	32/2.0

The technical data and performance may be modified without prior notice depending on the technical advances.
Components may be replaced with materials of equivalent or superior quality without prior notice.

BELGICAST
Polígono Industrial La Cruz, parcela P-4-1, 48196 Lezama, Bizkaia
T +34 94 488 91 00 · belgicast@belgicast.es · www.belgicast.eu

BELGICAST
WATER IS LIFE