2025

INFINITY resilient seated gate valve

BPA LABELLING FREE





BELGICAST
WATER IS LIFE

RESILIENT SEATED GATE VALVES

INFINITY

The latest in BELGICAST's proven range of valves, the INFINITY represents a new generation of resilient seated gate valves [DN40-700]. As well as boasting of the latest technological advances and unique technical features, INFINITY has been 100% designed and manufactured in Europe using high quality materials and the latest manufacturing technologies, to guarantee, to our valuable customers, an extraordinary lifetime, outstanding operability and unique safety features.



FUNCTIONS

Isolation resilient seated gate valves, with wedge fully encapsulated in elastomer, for ON/OFF duty, and operation by means of handwheel or T-key.

ADVANTAGES

- **Low operating torque:** INFINITY and its new wedge and stem technology ensures smooth functionality with outstanding low torque values.
- **Longer service life:** new guiding system for the wedge with male composite sliding skate in order to easily achieve the 2500 cycles endurance test required by European standards.
- **Corrosion resistance:** GSK/RAL-GZ coating in standard up to DN300 with epoxy thickness of 250 microns minimum. Threadless bonnet up to DN300 that allows continuous coating. High quality materials.
- **Low head loss:** clear way and straight bore design from DN40 up to DN600 in order to allow a free path without restriction of the fluid.
- **Bubble tight shut off:** new wedge design with increased thickness of the elastomer at the sealing areas to improve tightness.
- **High minimum resistant torque:** Innovative design of the thrust system for minimum strength torque that exceeds current standards.

USES

- **On networks, gate valves can be:**
  - Used both as part of new works and renovations.
  - Installed outside, buried in the ground, in valves' room, or in buildings.
- **The use of gate valves allows user:**
  - To balance the distribution of water at all points in the mesh network (in open or closed position).
  - To isolate control valves, fire hydrants, air valves, pumps, etc. for their maintenance.
  - To perform maintenance on the network (isolation of part of the network).
  - To stop the flow in the case of failure or pipe incident.
  - To drain water tanks or sections of the water network.

APPLICATIONS

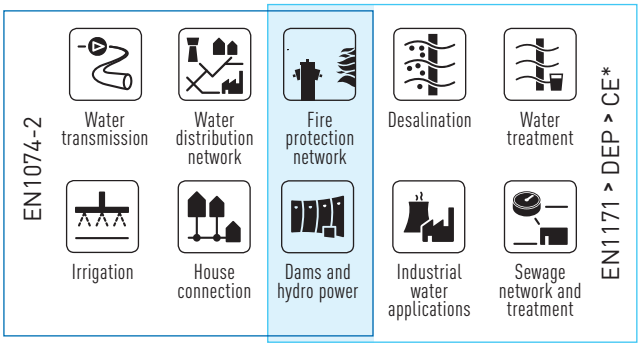

* See page 30 for gate valves which are subjected to CE marking according to the European "Pressure Equipment Directive" 2014/68/EU (PED).

The technical data and performance may be modified without prior notice depending on the technical advances.

F4/F5



PAGE: 10

TECHNICAL DATA

DN range: 40-300mm
PN/PFA: 16bar

DESCRIPTION

Gate valves with flange connection. Available with Standard body length according to EN 558 Series 14 or Series 15. To be operated by means of Handwheel or T-Key.

F4/F5



PAGE: 12

TECHNICAL DATA

DN range: 350-700mm
PN/PFA: 16bar

DESCRIPTION

Gate valves with flange connection. Available with Standard body length according to EN 558 Series 14 or Series 15. To be operated by means of Handwheel or T-Key.

BS



PAGE: 14

TECHNICAL DATA

DN range: 50-300mm
PN/PFA: 16bar

DESCRIPTION

Gate valves with flange connection. Comply to BS5163 standard with length accordingly to BS EN 558 Series 3. To be operated by means of Handwheel or T-Key.

GST



PAGE: 16

TECHNICAL DATA

DN range: 50-300mm
PN/PFA: 16bar

DESCRIPTION

Gate valves with flange connection. Length according to GOST 3706. To be operated by means of Handwheel or T-Key.

PN 25

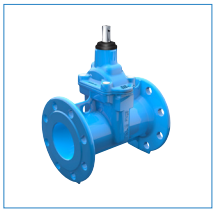

PAGE: 18

TECHNICAL DATA

DN range: 50-300mm
PN/PFA: 25bar

DESCRIPTION

Gate valves with flange connection. Available with body length according to EN 558 Series 15. To be operated by means of Handwheel or T-Key.

INFINI-3 INFINI-4



PAGE: 20

TECHNICAL DATA

DN range: 50-300mm
PN/PFA: 16bar

DESCRIPTION

Combination of 3 or 4 gate valves with flange connection. Compact designs to use where space is at premium, for example in urban applications. Different combinations of diameters can be available. To be operated by means of Handwheel or T-Key.

PE ENDS



PAGE: 22

TECHNICAL DATA

DN range: 40/50 - 300/315 mm
PN/PFA: 10 or 16bar

DESCRIPTION

Gate valves with PE ends for assembly on PE pipes with electrofusion couplings or by butt fusion welding process. Gives continuity to the installation. To be operated by means of Handwheel or T-Key.

SPIGOT ENDS

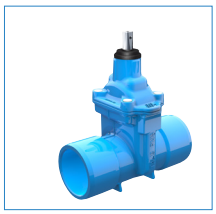

PAGE: 24

TECHNICAL DATA

DN range: 50-450mm
PN/PFA: 16bar

DESCRIPTION

Gate valves with spigot ends for connection with asbestos pipes. To be operated by means of Handwheel or T-Key.

BLS



PAGE: 26

TECHNICAL DATA

DN range: 80-200mm
PN/PFA: 16bar

DESCRIPTION

Gate valves for assembly on cast iron pipe with BLS connection system. To be operated by means of Handwheel or T-Key.

PREPARED FOR ELECTRIC ACTUATOR



SEE OTHER DEDICATED BROCHURE

TECHNICAL DATA

DN range: 40-700mm
PN/PFA: 16bar

DESCRIPTION

Gate valves with flange connection. Available with Standard body length according to EN 558 Series 14 or Series 15. To be operated by means of Electric Actuator.

The technical data and performance may be modified without prior notice depending on the technical advances.

CHARACTERISTICS

- Made of **high quality materials** according to the relevant standards.
- Clear way and **straight bore**, so the flow is optimum with minimum head losses.
- **Replaceable packing** under pressure.
- **Three independant O-rings** to guarantee the tightness throughout the stem. Two O-rings above the collar and one below (up to DN300).
- **Patented* three locking tab for bayonet system** up to DN300, with clamping ring to avoid self dismantling, leakage and ejection risk.
- **Innovative dust guard** made of three O-rings integrated into one single piece that prevent ingress of dirt at the stem level, and ensures full isolation (up to DN300).
- Wedge **fully encapsulated** in elastomer for a better resistance to corrosion.
- Integral male composite sliding skate as guiding system for **easy operation** under maximum differential pressure.
- Body bonnet bolts are protected with hot melt glue.
- **Rounded surfaces** of the body ensure a uniform coating and protection of the highest quality.
- **Excellent corrosion resistance** thanks to the fully coated bonnet (not threads) and GSK/RAL-GZ coating in standard up to DN300 with epoxy thickness of 250 microns minimum.
- Stem in **stainless steel**.
- **Maintenance free**.
- Designed to be operated by **handwheel or T-key**.
- **Approved** by major organizations worldwide for drinking water.
- In conformity with **European standards** EN 1074-2 (annex A) and EN 1171 (category 3).
- **100% tested** according to EN 12166-1 standard.

(*) List of the countries on request.

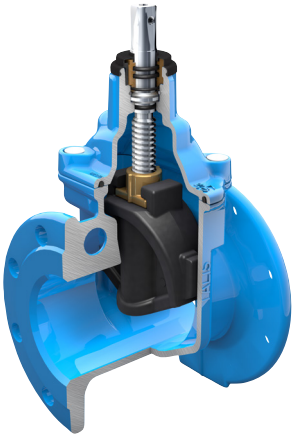

TECHNICAL DATA

- **Nominal Diameter (DN):** DN40 to DN700.
- **Body length to EN558:**
  Series 14: short body (F4).
  Series 15: long body (F5).
  Series 3: BS.
- **Closing direction:**
  Clockwise closing (CC).
  Anticlockwise closing (ACC).
- **Nominal Pressure (PN/PFA/PS):** PN16, PN25.
- **Flange Drilling:** PN10, PN16 or PN25 according to EN 1092-2.
- **Medium Temperature (EN1074-2):**
  - Epoxy coating: -10 to 50°C
  - Enamel coating: -10 to 50°C (up to 70°C under request, in the case of EN1171).
- **Water tightness:**
  Rate A according to EN 12266-1.
- **Maximum Velocity:**

PN/PFA/PS	EN1074-2
10 bar	3 m/s
16 bar	4 m/s
25 bar	5 m/s

APPROVALS

- DVGW, NF, ACS, KIWA, OVGW, WRAS, VdS, ...

OPTIONS/VARIANTS

- Epoxy 300 microns mini, others,...
- Full enamel coating.
- Electric actuator, Pneumatic/ Hydraulic cylinder, others ...
- Visual mechanical position indicator with optional electrical limit switch.
- Configuration for sea water, sewage water and hot water.
- Valve complying to BS5163 type B.
- Wedge fully encapsulated in NBR or hot potable water approved EPDM (up to 70°C).
- Bolts in stainless steel A4.
- Accessories (handwheel, captop, stem extension, others ...).

The technical data and performance may be modified without prior notice depending on the technical advances.

MATERIAL GUIDANCE



STUFFING NUT IN BRASS CW617N

BOLTS IN STEEL 12.9 + GEOMET 500B COATING

OTHERS VARIANTS*:

- Stainless Steel A4

STEM IN STAINLESS STEEL AISI 420/1.4021

OTHERS VARIANTS*:

- AISI 316 L /1.4404

BONNET IN DUCTILE IRON EN-GJS-500-7

WEDGE NUT IN BRASS CW617N

OTHERS VARIANTS*:

- Aluminium-bronze CW307G
- DZR Brass CW602N

WEDGE IN DUCTILE IRON EN-GJS-500-7 + EPDM ELASTOMER

OTHERS VARIANTS* FOR ELASTOMER:

- NBR
- EPDM High Temperature

EPOXY COATING IN STANDARD

OTHERS VARIANTS*:

- Enamel
- Poliester
- Rilsan

BODY IN DUCTILE IRON EN-GJS-500-7

(*) :These informations are only dedicated to show the different types of material for our Infinity gate valves. Variants solution can't be chosen individually, but are part of non dissociable offer on our products. For more details about our product offer, please contact us.

The technical data and performance may be modified without prior notice depending on the technical advances.

TECHNICAL ADVANTAGES

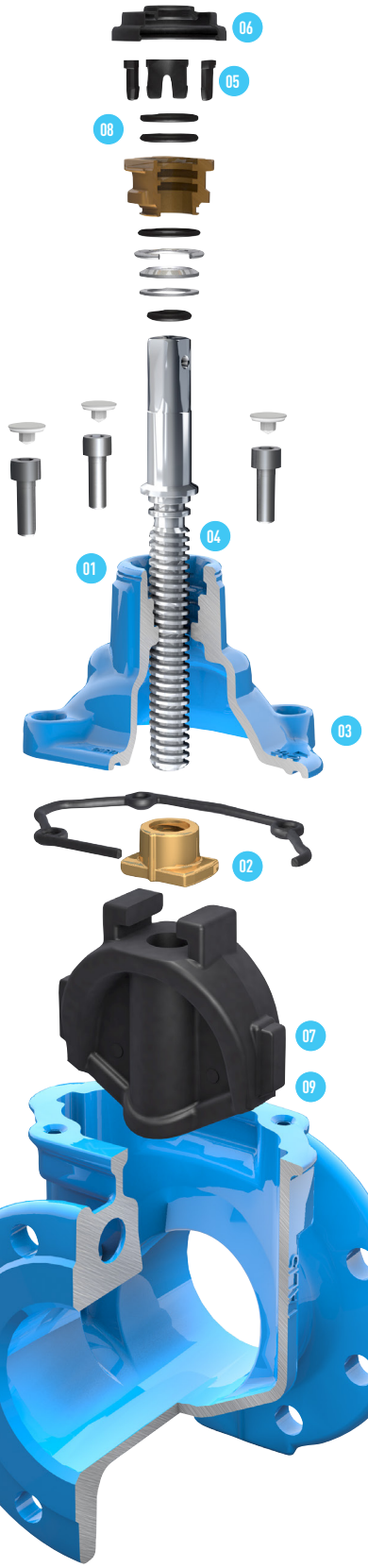

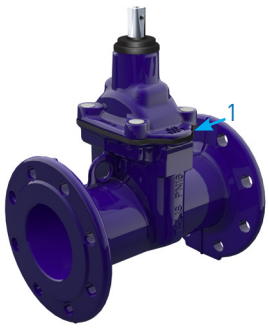

FOR ENAMELED VERSION, THE VALVE INTEGRATES AN EDGE PROTECTION (1) PLACED ALL AROUND BETWEEN THE BODY AND THE BONNET.

The technical data and performance may be modified without prior notice depending on the technical advances.

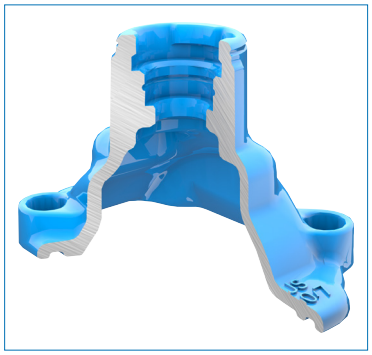

01: Due to our PATENTED* three locking tab bayonet system, The INFINITY gate valve has no threads, enabling a **continuous coating** and therefore avoiding corrosion problems.

Moreover, it is easy to remove the stuffing nut, with the valve under pressure and fully open, in order to change the O-ring.

* List of the countries on request.

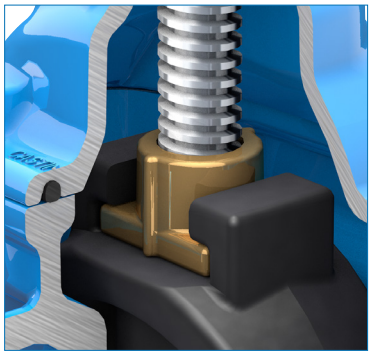

02: Free wedge nut, **reduces the stem bending forces** and at the same time enables it to be easily replaced.

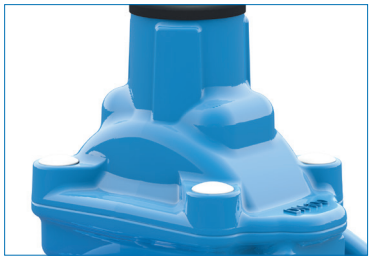

03: The more compact new cap, reduces the water retention areas in order **to reduce the risk of bacterial growth.**



04: Stem and collar made in one piece in stainless steel for **better resistance to axial load and to withstand higher operating torques.** Washers with PTFE coating (1) placed above and under the collar allow to reduce friction torque and protect coating inside the Bonnet.

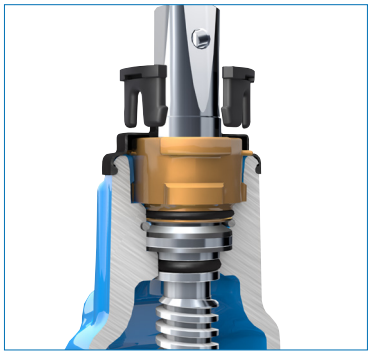

05: The three locking tabs for bayonet system as well as clamping ring prevent self-dismantling, caused mainly by over-torques and vibrations, to avoid risk of leakage and also **prevent incidents and ensures the safety of all personnel on site**.

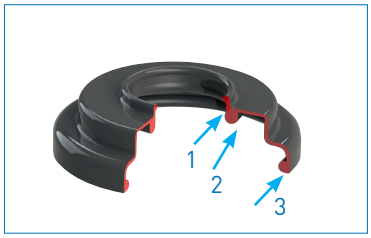

06: Dust guard integrating three O-ring shape, **prohibiting the introduction of foreign** bodies at the stem.



07: Male guiding system with composite sliding skate (1) reduces the wear of the wedge against the body, allowing a smooth functionality and a longer life time of the valve. Furthermore, the increased thickness of the elastomer at the sealing areas improves product resilience to the usual small impurities encountered in networks.

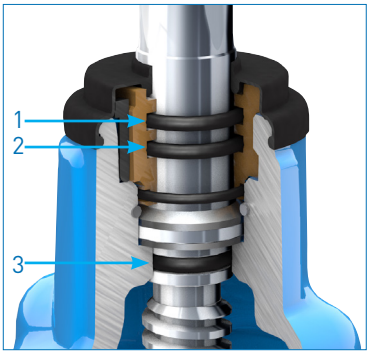

08: Triple seal at the operating stem to ensure tightness with the test of time (2500 cycles).

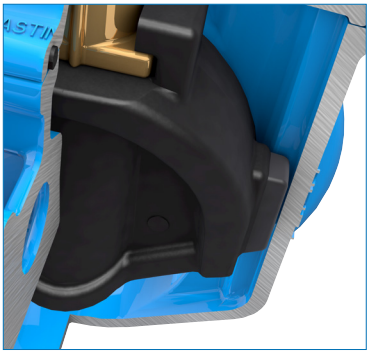

09: Our **new male composite sliding skate technology** minimizes the wedge friction against the body ensuring a low operating torque even under high differential pressure and preventing damage or corrosion generated by the friction.

The technical data and performance may be modified without prior notice depending on the technical advances.

COATING

OPTIMUM PROTECTION

The INFINITY resilient seated gate valve has been designed with even more rounded surfaces and more ergonomic shapes that allow more uniform coating and ensure protection of the highest quality.

The epoxy powder used by BELGICAST is approved for use with potable water by the most prestigious institutions worldwide.

Our new state-of-the-art coating line installed in BELGICAST, based on an innovative process with fluidized bath and dipping robot, ensures an excellent adhesion, as well as controlled thicknesses and perfect continuity of the coating without porosity.

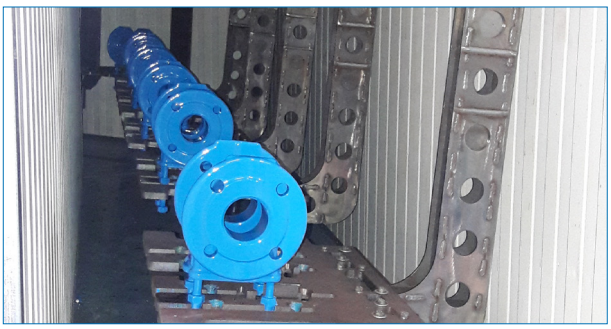

GSK/RAL-GZ coating in standard with a minimum epoxy thickness of 250 microns*

BELGICAST painting facilities are approved by the **GSK Quality Assurance Association** for Heavy-Duty Corrosion Protection of Valves and Fittings with Powder Coating.

INFINITY resilient seated gate valves are awarded by the **RAL-GZ 662 Quality Mark (Gütezeichen)** delivered by the GSK Quality Assurance Association. Obtaining this quality mark requires a quality-assurance in accordance with the current regulations, as well as strenuous additional requirements in order to ensure the highest level of quality and performance of the coating:

- Minimum coating thickness of 250 microns,
- Use of powder GSK approved,
- Coating line GSK approved,
- Regular monitoring of the process and its parameters,
- Product approval with the coating,
- Regular coating test (coating thickness, freedom from porosity, impact resistance, wetting, tensile adhesive strength,...),
- Two audits per year carried out by a third party body.

Permanent protection with enamel

Optionally, BELGICAST can manufacture gate valves completely enamelled. Vitreous enamel is highly resistant to corrosion, abrasion, sunlight and sedimentation due to its low porosity and smooth surface. The enamel is vitrified at 720° C and forms a perfect and permanent bond at the foundry.

BELGICAST's extensive experience in the manufacture of gate valves, together with modern enamel equipment, allows production of the highest quality.



VERSION WITH ENAMEL COATING

TEMPERATURES

Depending on the applied anticorrosive coating, the INFINITY gate valve is suitable for the following continuous operating temperatures:

- Epoxy powder protection: –10 °C to 50°C.
- Enamel protection: –10 °C to 50°C (70°C under request).

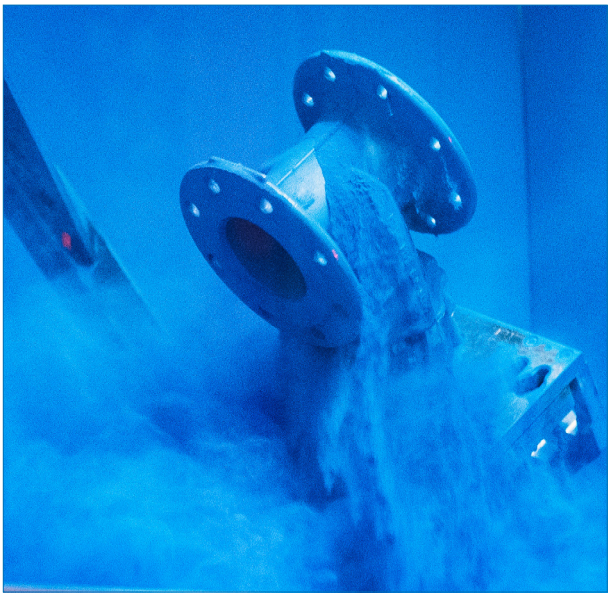

* GSK/RAL-GZ coating in standard up to DN300, bigger sizes upon request.

The technical data and performance may be modified without prior notice depending on the technical advances.

QUALITY & TESTING







VALVE TESTING ACCORDING TO EN 12266-1 - EN 1074

Testing pressures

- Shell tightness: 25 bar at room temperature.
- Seat tightness: 17.6 bar at room temperature.

Minimum test duration (in seconds)

Nominal diameter DN	Shell	Seat
Up to DN50 included	15	15
From DN65 up to DN150 included	60	60
From DN200 up to DN300 included	120	120
DN350 and above	300	120

Maximum allowable seat leakage

The criterion for seat leakage of BELGICAST resilient seated gate valves is
Rate A: no visually detectable leakage for the duration of the test ("zero drops").

Quality control

- 100% of BELGICAST resilient seated gate valves are tested according to EN 12266-1, DIN 3230, or as per customer requirements.
- According to EN 1074 (2,500 cycles endurance resistance).

The technical data and performance may be modified without prior notice depending on the technical advances.

MATERIALS & DIMENSIONS

F4/F5 - DN40/300 - PN10/16

(According to EN1074-2 (annex A) and EN1171 (category 3))



Item	Description	N°	Material	Standard
1	Body	1	EN-GJS-500-7 [2]	EN 1563
2	Bonnet	1	EN-GJS-500-7 [2]	EN 1563
3	Wedge	1	EN-GJS-500-7	EN 1563
4	Wedge coating	1	EPDM [1]	EN 681-1
5	Stem	1	1.4021	EN 10088
6	Wedge lock nut	1	Copper alloy CW617N	EN 12165
7	Body-bonnet gasket	1	EPDM [1]	EN 681-1
8	Lower stem washer	1	Steel+PTFE	-
9	O-ring (stem)	1	EPDM [1]	EN 681-1
10	Stuffing nut (bayonet)	1	Copper alloy CW617N	EN 12165
11	O-ring (stuffing nut)	2	NBR	ASTM D2000
12	O-ring (stuffing nut/bonnet)	1	NBR	ASTM D2000
13	Body bonnet bolting	acc/DN	Steel 12.9 Geomet coated	EN 10213-2 / DIN 912
14	Dust guard	1	EPDM	EN 681-1
15	Handwheel	1	Stamped steel [3]	EN 10130
16	Handwheel washer	1	1.4301	EN 10088 / DIN 9021
17	Handwheel bolt	1	1.4301	EN 10088 / DIN 933
18	Square cap	1	EN-GJS-500-7 [3]	EN 1563
19	Square cap bolt	1	Steel 8.8 Geomet coated	EN 10213-2 / DIN 912
20	Square cap plug	1	Lupolen	-
21	Wedge sliding skate [4]	2	Composite	-
22	Locking tabs	3	Composite	-
23	Clamping ring	1	1.4301	EN 10088
24	Upper inclined stem washer	1	Steel+PTFE	-

1) or NBR, depending on the approval and on the application. 2) GSK blue epoxy coating (Ral 5015) 3) black epoxy coating.
4) DN40/50 without wedge sliding skates.

DN	øD (mm)	EN 1092-2 PN10			EN 1092-2 PN16			EN 558 (DIN 3202)		H (mm)	h (mm)	ød (mm)	øD1 (mm)	No. of turns for closing	Weight (kg)	
		øK (mm)	øG (mm)	n°xd	øK (mm)	øG (mm)	n°xd	S14 (mm)	S15 (mm)						S14	S15
40	150	110	84	4x19	110	84	4x19	140	240	179	75	-	150	11,5	6,7	7,3
50	165	125	99	4x19	125	99	4x19	150	250	202	83	-	150	14	8,3	8,8
65	185	145	118	4x19	145	118	4x19	170	270	242	93	20	150	15	12,3	13
80	200	160	132	8x19	160	132	8x19	180	280	265	100	20	200	18	13,7	14,9
100	220	180	156	8x19	180	156	8x19	190	300	290	110	20	200	21,5	16,4	17,9
125	250	210	184	8x19	210	184	8x19	200	325	345	125	25	300	27	22,5	25,2
150	285	240	211	8x23	240	211	8x23	210	350	378	143	25	300	32	28,2	31,6
200	340	295	266	8x23	295	266	12x23	230	400	465	170	30	400	41,5	46,9	54,2
250	400	350	319	12x23	355	319	12x28	250	450	554	200	30	400	43	69,5	78,8
300	455	400	370	12x23	410	370	12x28	270	500	635	228	30	500	51	96,5	114,5

On request : lateral intakes option only for DN80, DN100 and DN150 S15.

The technical data and performance may be modified without prior notice depending on the technical advances.

F4/F5 - DN40/300 - PN10/16

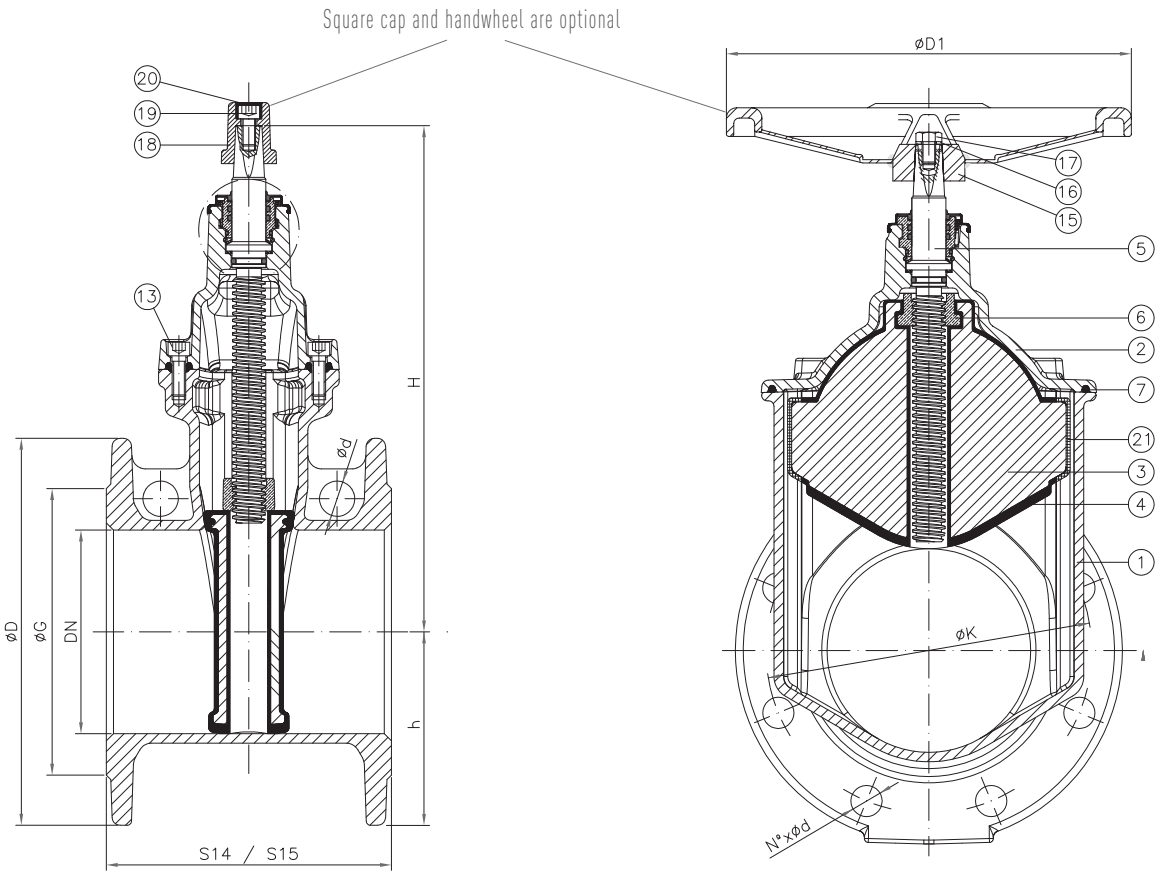

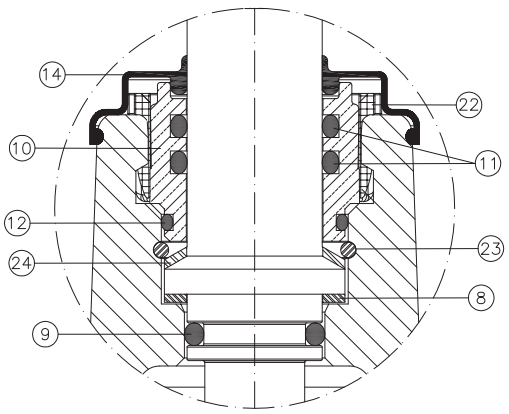

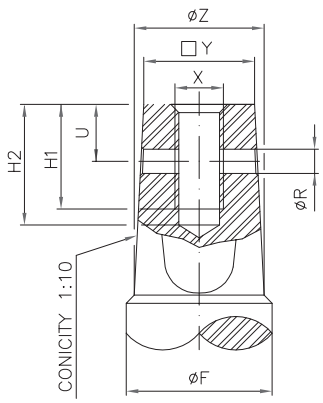

DN	□Y	ØZ	ØR	U	X	H1	H2	ØF
40/50	14.3	17	5	10	M8	15	18	20
65/80	17.3	21	6	12	M8	15	18	24
100	19.3	23	6	13	M10	15	18	24
125/150	19.3	25	6	13	M10	15	18	26
200	24.3	28.5	6	16	M12	15	18	28.5
250/300	27.3	32	6	14	M12	15	18	32

The technical data and performance may be modified without prior notice depending on the technical advances.

MATERIALS & DIMENSIONS

F4/F5 - DN350/700 - PN10/16

(According to EN1074-2 (annex A) and EN1171 (category 3))



Item	Description	N°	Material	Standard
1	Body	1	EN-GJS-500-7 [2]	EN 1563
2	Bonnet	1	EN-GJS-500-7 [2]	EN 1563
3	Wedge	1	EN-GJS-500-7	EN 1563
4	Wedge coating	1	EPDM [1]	EN 681-1
5	Stem	1	1.4021	EN 10088
6	Wedge lock nut	1	Copper alloy CW617N	EN 12165
7	Body bonnet gasket	1	EPDM [1]	EN 681-1
8	Lower packing bushing	1	POM	-
9	O-ring (stem)	2	EPDM [1]	EN 681-1
10	Upper packing bushing	1	POM	-
11	O-ring int (upper packing bushing)	2	NBR	ASTM D2000
12	O-ring ext (upper packing bushing)	1	NBR	ASTM D2000
13	Body bonnet bolt	acc/DN	Steel 8.8 Geomet coated	EN 10213-2 / DIN 912
14	Dust guard	1	EPDM	EN 681-1
15	Handwheel	1	Stamped steel [3]	-
16	Handwheel washer	1	1.4301	EN 10088
17	Handwheel bolt	1	1.4301	EN 10088
18	Square cap	1	EN-GJS-500-7 [3]	EN 1563
19	Square cap bolt	1	Steel 8.8 Geomet coated	EN 10213-2 / DIN 912
20	Square cap plug	1	Lupolen	-
21	Wedge sliding skate	2	Composite	-
22	Upper bonnet	1	EN-GJS-500-7 [2]	EN 1563
23	O-ring (lower packing bushing)	1	EPDM [1]	EN 681-1
24	Axial ball bearing	2	Stainless steel	-
25	Bonnet-upper bonnet O-ring	1	NBR	ASTM D2000
26	Bonnet-upper bonnet bolt	4	Steel 8.8 Geomet coated	EN ISO898-1
27	Eyebolt	2	Steel 8.8 JS500 coated	EN ISO898-1
28	Cotter	1	Steel 8.8	EN ISO898-1
29	Packing washer	1	254 SMO	DIN 1.4547

1) or NBR, depending on the approval and on the application. 2) Blue epoxy coating (Ral 5015) 250 microns minimum.
3) black epoxy coating.

FOR VALVES WITH MAXIMUM WORKING PRESSURE OF 16 BAR:

DN	EN 1092-2 PN 10				EN 1092-2 PN 16				EN 558 (DIN 3202)		H (mm)	L (mm)	B (mm)	øD1 (mm)	No. of turns for closing	Weight kg			
																S14 (F4)		S15 (F5)	
	øD (mm)	øK (mm)	øG (mm)	no. x d	øD (mm)	øK (mm)	øG (mm)	no. x d	S14 (F4) (mm)	S15 (F5) (mm)						PN10	PN16	PN10	PN16
350	520	460	429	16x23	520	470	429	16x28	290	550	812	260	506	600	51	190	190	213	213
400	580	515	480	16x28	580	525	480	16x31	310	600	905	290	606	600	58	274	274	311	311
450	640	565	530	20x28	640	585	548	20x31	330	650	1002	320	672	600	65	310	309	363	362
500	715	620	582	20x28	715	650	609	20x34	350	700	1054	358	748	600	72	398	396	445	443
600	840	725	682	20x31	840	770	720	20x37	390	800	1285	420	955	800	87	670	668	776	774
700*	895	840	794	24x31	910	840	794	24x37	-	900	1285	455	955	800	87	-	-	970	975

FOR VALVES WITH MAXIMUM WORKING PRESSURE OF 10 BAR:

DN	EN 1092-2 PN10				EN 558 (DIN 3202)		H (mm)	L (mm)	B (mm)	øD1 (mm)	No. of turns for closing	Weight (kg)	
	øD (mm)	øK (mm)	øG (mm)	n°xd	S14 (F4) (mm)	S15 (F5) (mm)						S14 (F5)	S15 (F5)
600	780	725	682	20x31	390	-	1285	390	955	800	87	574	-
700*	895	840	794	24x31	-	900	1285	447.5	955	800	87	-	815

* Reduced bore of 600 mm. Valves produced from DN600/S14 with flanged conical adapters bolted on each side (see next page).
On request: by-pass option only for DN350 to DN700 F5 and DN600 F4.

The technical data and performance may be modified without prior notice depending on the technical advances.

F4/F5 - DN350/700 - PN10/16

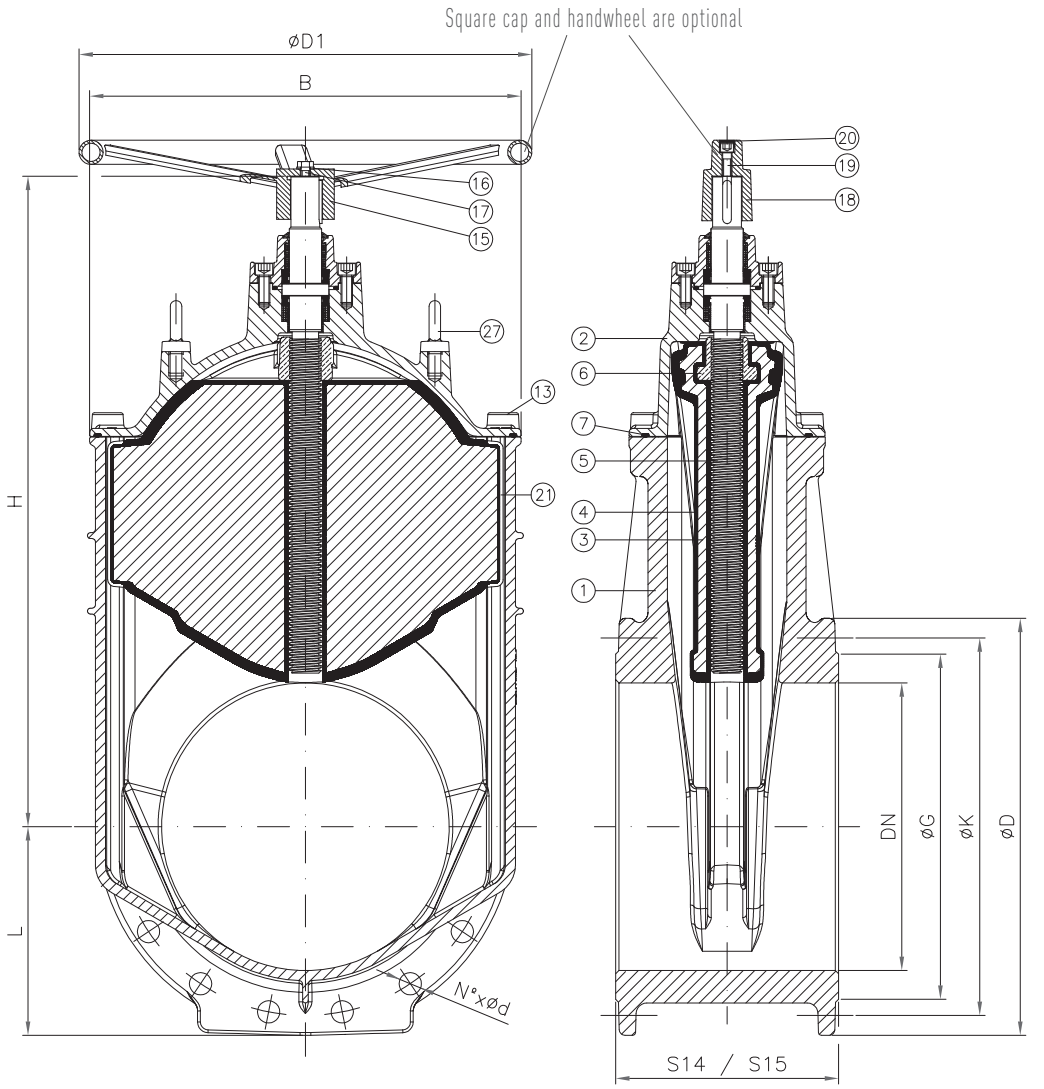

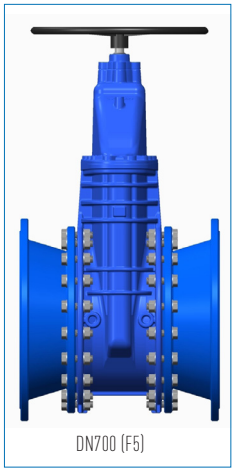
DN700 (F5)

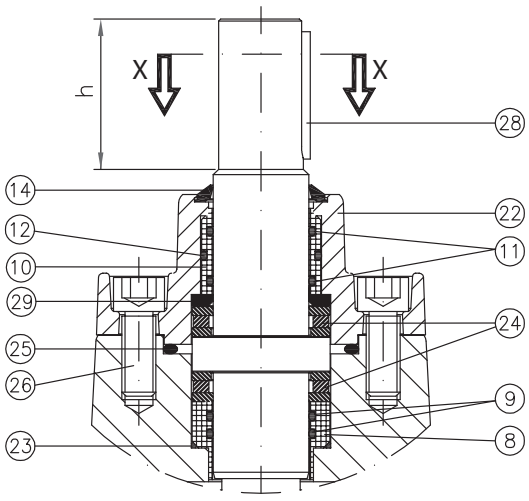

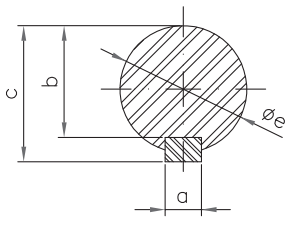

DN	h	øe	b	c	a	Cotter
350	73	30	26.2	33.2	8	8x7x56
400/450/500	71	42	37	45	12	12x8x60
600/700	95	42	37	45	12	12x8x70

The technical data and performance may be modified without prior notice depending on the technical advances.

MATERIALS & DIMENSIONS

BS - DN50/300 - PN10/16

(According to EN1074-2 (annex A), EN1171 (category 3) and BS5163*)



Item	Description	N°	Material	Standard
1	Body	1	EN-GJS-500-7 [2]	EN 1563
2	Bonnet	1	EN-GJS-500-7 [2]	EN 1563
3	Wedge	1	EN-GJS-500-7	EN 1563
4	Wedge coating	1	EPDM [1]	EN 681-1
5	Stem	1	1.4021	EN 10088
6	Wedge lock nut	1	Copper alloy CW617N	EN 12165
7	Body-bonnet gasket	1	EPDM [1]	EN 681-1
8	Lower stem washer	1	Steel + PTFE	-
9	O-ring (stem)	1	EPDM [1]	EN 681-1
10	Stuffing nut (bayonet)	1	Copper alloy CW617N	EN 12165
11	O-ring (stuffing nut)	2	NBR	ASTM D2000
12	O-ring (stuffing nut/bonnet)	1	NBR	ASTM D2000
13	Body bonnet bolting	acc/DN	Steel 12.9 Geomet coated	EN 10213-2 / DIN 912
14	Dust guard	1	EPDM	EN 681-1
15	Handwheel	1	Stamped steel [3]	EN 10130
16	Handwheel washer	1	1.4301	EN 10088 / DIN 9021
17	Handwheel bolt	1	1.4301	EN 10088 / DIN 933
18	Square cap	1	EN-GJS-500-7 [3]	EN 1563
19	Square cap bolt	1	Steel 8.8 Geomet coated	EN 10213-2 / DIN 912
20	Square cap plug	1	Lupolen	-
21	Wedge sliding skate [4]	2	Composite	-
22	Locking tabs	3	Composite	-
23	Clamping ring	1	1.4301	EN 10088
24	Upper inclined stem washer	1	Steel + PTFE	-

1) or NBR, depending on the approval and on the application. 2) GSK blue epoxy coating (Ral 5015). 3) black epoxy coating.
4) DN40/50 without wedge sliding skates.

DN	øD (mm)	EN 1092-2 (BS-4504) PN10			EN 1092-2 (BS-4504) PN16			EN 558	H (mm)	H1 (mm)	H2 (mm)	øD1 (mm)	No. of turns for closing	Weight (kg)
		øK (mm)	øG (mm)	n°xd	øK (mm)	øG (mm)	n°xd	S3 (mm)						
50	165	125	99	4x19	125	99	4x19	178	197	269	82.5	150	14	8.3
65	185	145	118	4x19	145	118	4x19	190	237	301	92.5	150	15	12.6
80	200	160	132	8x19	160	132	8x19	203	260	324	100	200	18	14.1
100	220	180	156	8x19	180	156	8x19	229	285	348	110	200	21,5	16.8
125	250	210	184	8x19	210	184	8x19	254	340	403	125	300	27	23.6
150	285	240	211	8x23	240	211	8x23	267	373	436	142.5	300	32	28.5
200	340	295	266	8x23	295	266	12x23	292	460	528	170	400	41,5	50.1
250	400	350	319	12x23	355	319	12x28	330	549	618	200	400	43	72.7
300	455	400	370	12x23	410	370	12x28	356	630	699	227.5	500	51	99.0

*Resilient seated gate valve according to EN1074-2 (annex B) and BS5163 for operacion by «Ring key and bar» is also part of our manufacturing range, documentation upon request.documentation upon request.

The technical data and performance may be modified without prior notice depending on the technical advances.

BS - DN50/300 - PN10/16

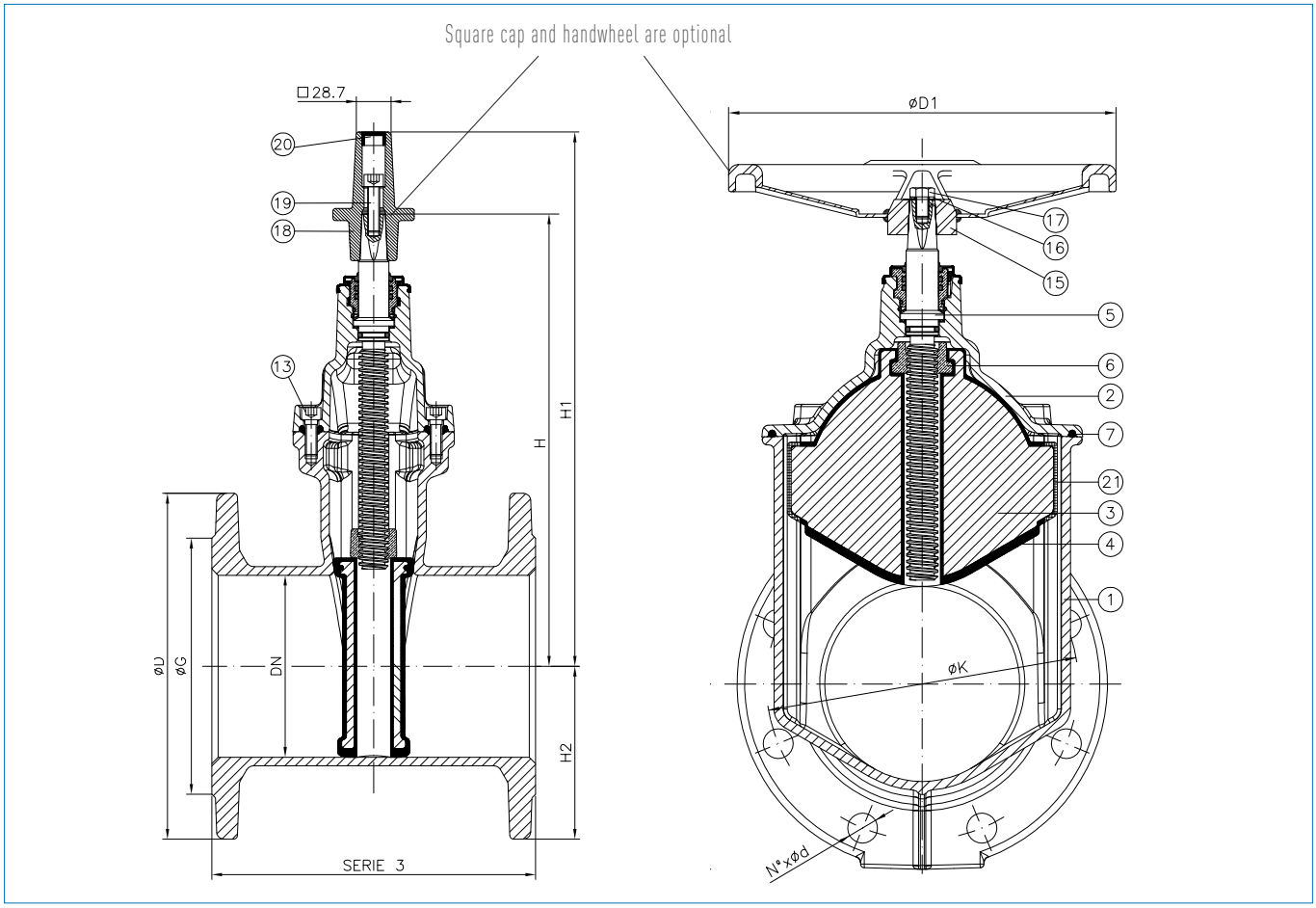

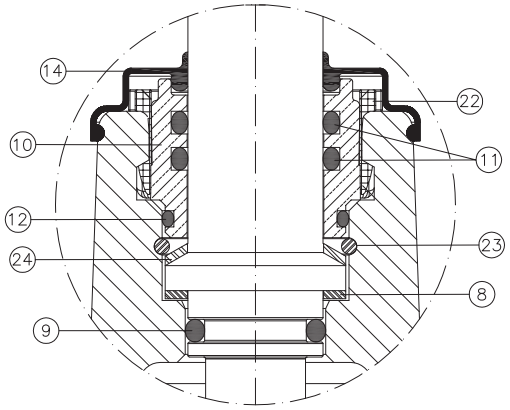

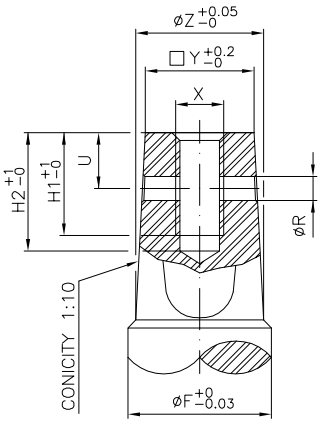

DN	□Y	øZ	øR	U	X	H1	H2	øF
50	14.3	17	5	10	M8	15	18	20
65/80	17.3	21	6	12	M8	15	18	24
100	19.3	23	6	13	M10	15	18	24
125/150	19.3	25	6	13	M10	15	18	26
200	24.3	28.5	6	16	M12	15	18	28.5
250/300	27.3	32	6	14	M12	15	18	32

The technical data and performance may be modified without prior notice depending on the technical advances.

MATERIALS & DIMENSIONS

GST - DN50/300 - PN10/16

(According to EN1074-2 (annex A) and EN1171 (category 3))
Face to face dimension according to GOST 3706*



Item	Description	N°	Material	Standard
1	Body	1	EN-GJS-500-7 [2]	EN 1563
2	Bonnet	1	EN-GJS-500-7 [2]	EN 1563
3	Wedge	1	EN-GJS-500-7	EN 1563
4	Wedge coating	1	EPDM [1]	EN 681-1
5	Stem	1	1.4021	EN 10088
6	Wedge lock nut	1	Copper alloy CW617N	EN 12165
7	Body-bonnet gasket	1	EPDM [1]	EN 681-1
8	Lower stem washer	1	Steel+PTFE	-
9	O-ring (stem)	1	EPDM [1]	EN 681-1
10	Stuffing nut (bayonet)	1	Copper alloy CW617N	EN 12165
11	O-ring (stuffing nut)	2	NBR	ASTM D2000
12	O-ring (stuffing nut/bonnet)	1	NBR	ASTM D2000
13	Body bonnet bolting	acc/DN	Steel 12.9 Geomet coated	EN 10213-2 / DIN 912
14	Dust guard	1	EPDM	EN 681-1
15	Handwheel	1	Stamped steel [3]	EN 10130
16	Handwheel washer	1	1.4301	EN 10088 / DIN 9021
17	Handwheel bolt	1	1.4301	EN 10088 / DIN 933
18	Square cap	1	EN-GJS-500-7 [3]	EN 1563
19	Square cap bolt	1	Steel 8.8 Geomet coated	EN 10213-2 / DIN 912
20	Square cap plug	1	Lupolen	-
21	Wedge sliding skate [4]	2	Composite	-
22	Locking tabs	3	Composite	-
23	Clamping ring	1	1.4301	EN 10088
24	Upper inclined stem washer	1	Steel+PTFE	-

1) or NBR, depending on the approval and on the application. 2) GSK blue epoxy coating (Ral 5015), 3) black epoxy coating.
4) DN40/50 without wedge sliding skates.

DN	øD (mm)	EN 1092-2 (BS-4504) PN10			EN 1092-2 (BS-4504) PN16			GOST 3706	H (mm)	h (mm)	ød (mm)	øD1 (mm)	No. of turns for closing	Weight (kg)
		øK (mm)	øG (mm)	nºxd	øK (mm)	øG (mm)	nºxd	L (mm)						
50	165	125	99	4x19	125	99	4x19	178	197	83	-	150	14	8.4
65	185	145	118	4x19	145	118	4x19	190	237	93	20	150	15	12.6
80	200	160	132	8x19	160	132	8x19	210*	260	100	20	200	18	14.2
100	220	180	156	8x19	180	156	8x19	230*	285	110	20	200	21,5	16.8
125	250	210	184	8x19	210	184	8x19	255	340	125	25	300	27	23.6
150	285	240	211	8x23	240	211	8x23	280*	373	143	25	300	32	28.9
200	340	295	266	8x23	295	266	12x23	330*	460	170	30	400	41,5	52.3
250	400	350	319	12x23	355	319	12x28	450	549	200	30	400	43	78.8
300	455	400	370	12x23	410	370	12x28	500	630	228	30	500	51	114.5

(*): Face to face dimensions of DN80, 100, 150 and 200 also comply to specific CSN standard (Czech technical standard).

The technical data and performance may be modified without prior notice depending on the technical advances.

GST - DN50/300 - PN10/16

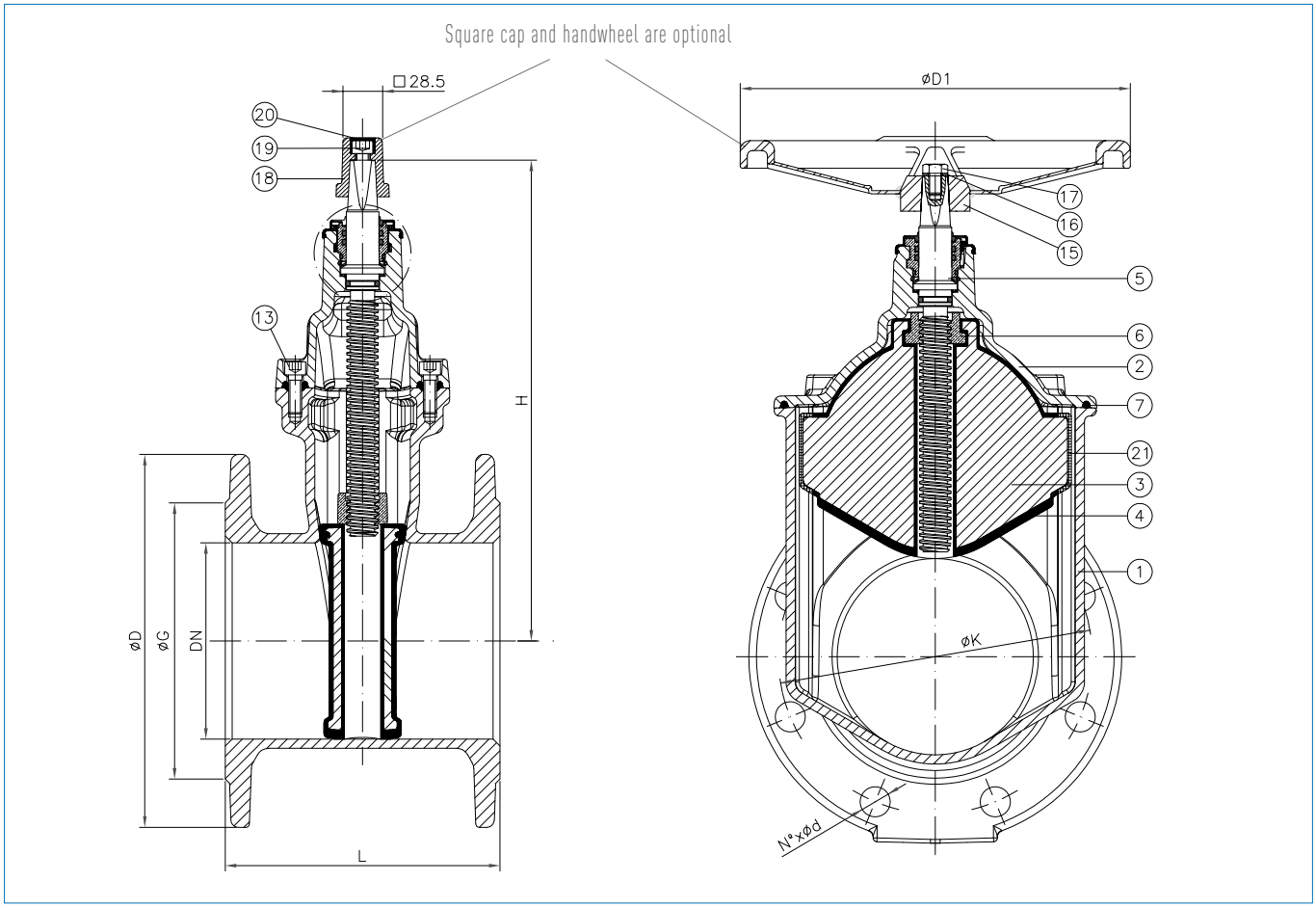

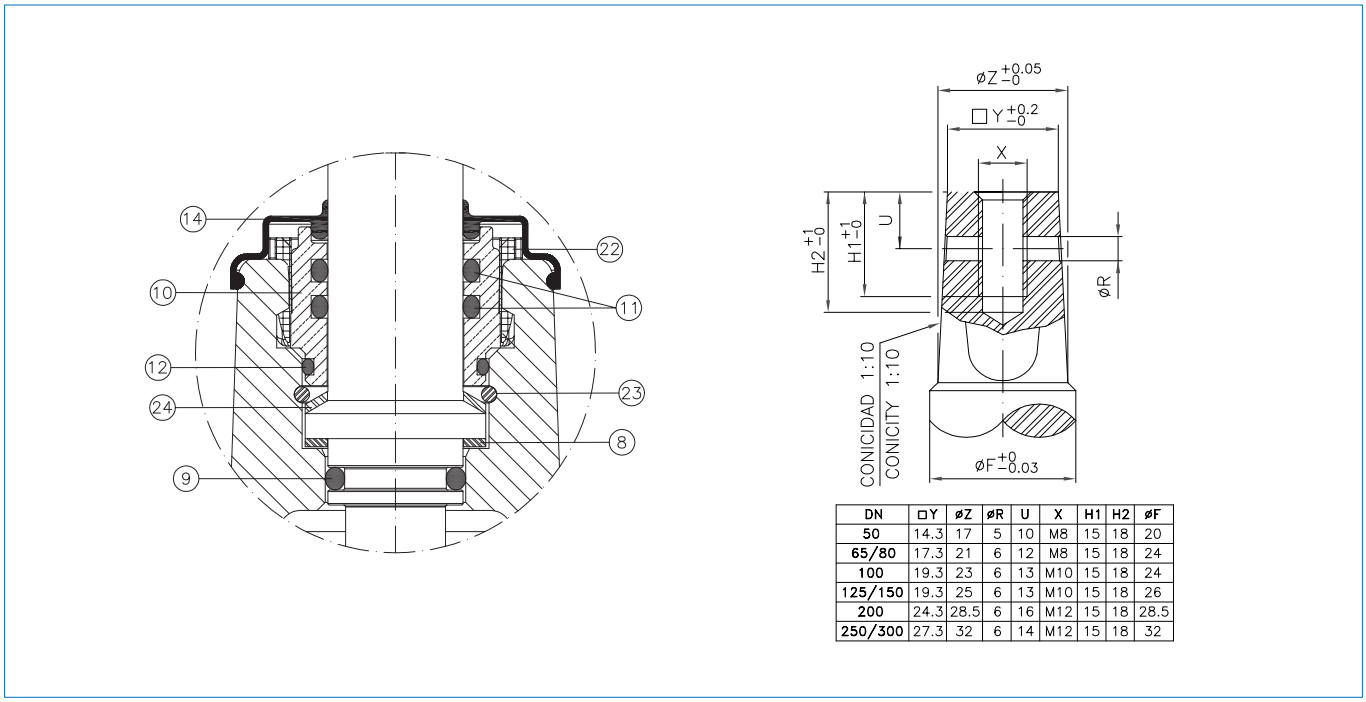

DN	□Y	øZ	øR	U	X	H1	H2	øF
50	14.3	17	5	10	M8	15	18	20
65/80	17.3	21	6	12	M8	15	18	24
100	19.3	23	6	13	M10	15	18	24
125/150	19.3	25	6	13	M10	15	18	26
200	24.3	28.5	6	16	M12	15	18	28.5
250/300	27.3	32	6	14	M12	15	18	32

The technical data and performance may be modified without prior notice depending on the technical advances.

MATERIALS & DIMENSIONS

PN25 - DN40/300

(According to EN1074-2 (annex A) and EN1171 (category 3))

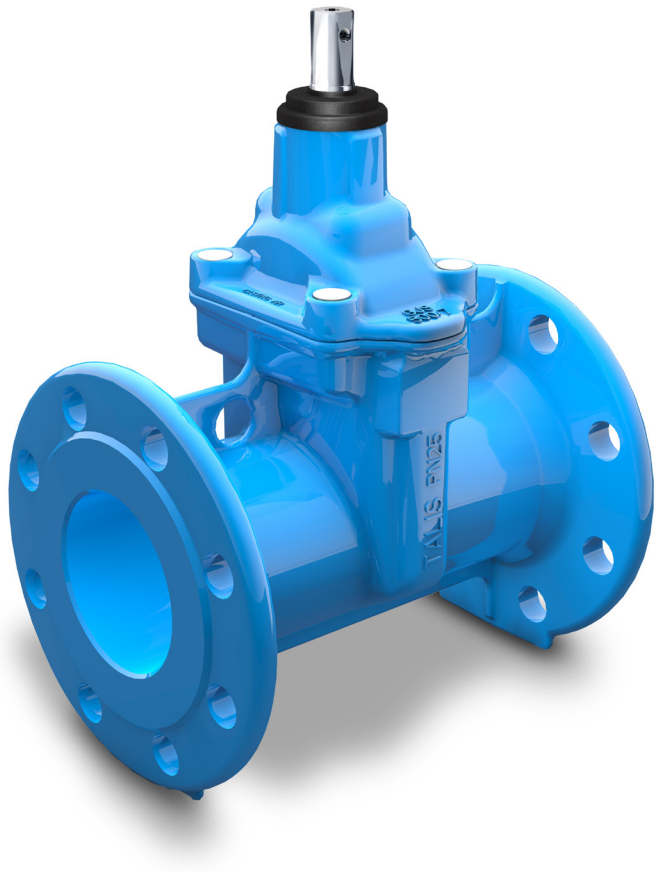

Item	Description	N°	Material	Standard
1	Body	1	EN-GJS-500-7 [2]	EN 1563
2	Bonnet	1	EN-GJS-500-7 [2]	EN 1563
3	Wedge	1	EN-GJS-500-7	EN 1563
4	Wedge coating	1	EPDM [1]	EN 681-1
5	Stem	1	1.4021	EN 10088
6	Wedge lock nut	1	Copper alloy CW617N	EN 12165
7	Body-bonnet gasket	1	EPDM [1]	EN 681-1
8	Lower stem washer	1	Steel+PTFE	-
9	O-ring (stem)	1	EPDM [1]	EN 681-1
10	Stuffing nut (bayonet)	1	Copper alloy CW617N	EN 12165
11	O-ring (stuffing nut)	2	NBR	ASTM D2000
12	O-ring (stuffing nut/bonnet)	1	NBR	ASTM D2000
13	Body bonnet bolting	acc/DN	Steel 12.9 Geomet coated	EN 10213-2 / DIN 912
14	Dust guard	1	EPDM	EN 681-1
15	Handwheel	1	Stamped steel [3]	EN 10130
16	Handwheel washer	1	1.4301	EN 10088 / DIN 9021
17	Handwheel bolt	1	1.4301	EN 10088 / DIN 933
18	Square cap	1	EN-GJS-500-7 [3]	EN 1563
19	Square cap bolt	1	Steel 8.8 Geomet coated	EN 10213-2 / DIN 912
20	Square cap plug	1	Lupolen	-
21	Wedge sliding skate [4]	2	Composite	-
22	Locking tabs	3	Composite	-
23	Clamping ring	1	1.4301	EN 10088
24	Upper inclined stem washer	1	Steel+PTFE	-

1) or NBR, depending on the approval and on the application. 2) GSK blue epoxy coating (Ral 5015) 3) black epoxy coating.
4) DN40/50 without wedge sliding skates.

DN	EN 10922 PN25				EN558 (DIN 3202)	H (mm)	h (mm)	ød (mm)	øD1 (mm)	No. of turns for closing	Weight (kg)
	øD (mm)	øK (mm)	øG (mm)	n°xd	S15 (F5) (mm)						
40	150	110	84	4x19	240	174	75	-	150	11,5	7,8
50	165	125	99	4x19	250	197	83	-	150	14	9,4
65	185	145	118	8x19	270	237	93	20	150	15	13,6
80	200	160	132	8x19	280	260	100	20	200	18	15,7
100	235	190	156	8x23	300	285	118	20	200	21,5	20,7
125	270	220	184	8x28	325	340	135	25	300	27	29
150	300	250	211	8x28	350	373	150	25	300	32	37,6
200	370	310	274	12x28	400	460	180	30	400	41,5	64,2
250	425	370	330	12x31	450	549	213	30	400	43	94,8
300	485	430	389	16x31	500	630	243	30	500	51	138,5

The technical data and performance may be modified without prior notice depending on the technical advances.

PN25 - DN40/300

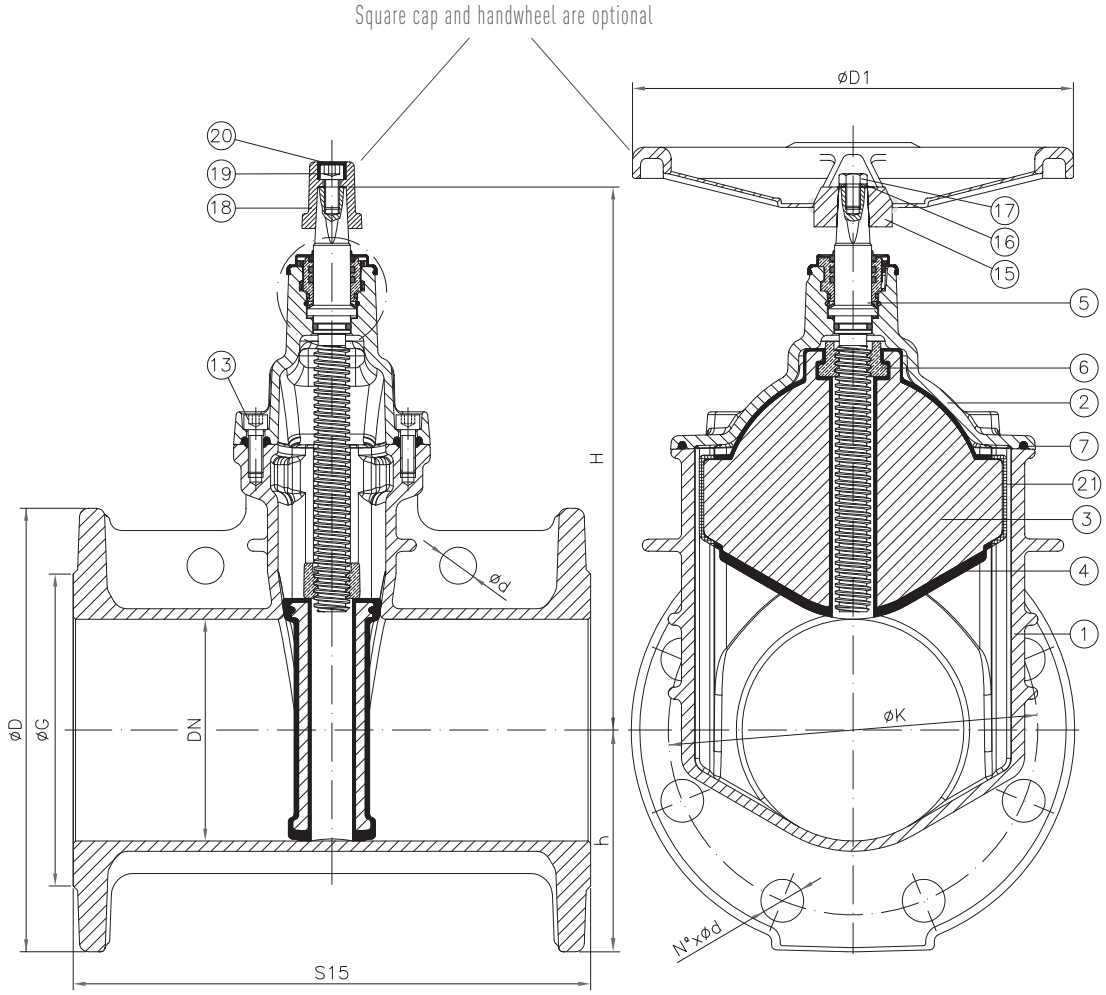

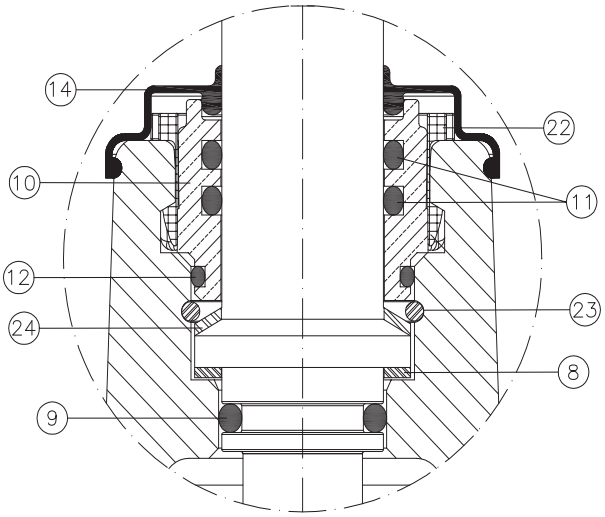

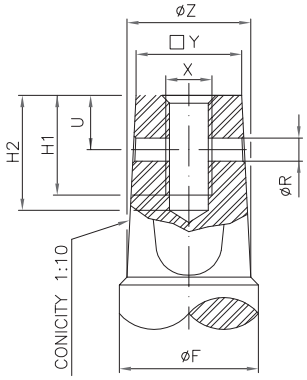

DN	□Y	ØZ	ØR	U	X	H1	H2	ØF
40/50	14.3	17	5	10	M8	15	18	20
65/80	17.3	21	6	12	M8	15	18	24
100	19.3	23	6	13	M10	15	18	24
125/150	19.3	25	6	13	M10	15	18	26
200	24.3	28.5	6	16	M12	15	18	28.5
250/300	27.3	32	6	14	M12	15	18	32

The technical data and performance may be modified without prior notice depending on the technical advances.

MATERIALS & DIMENSIONS

INFINI-3 / INFINI-4 - DN50/300 - PN10/16

(According to EN1074-2 (annex A) and EN1171 (category 3))

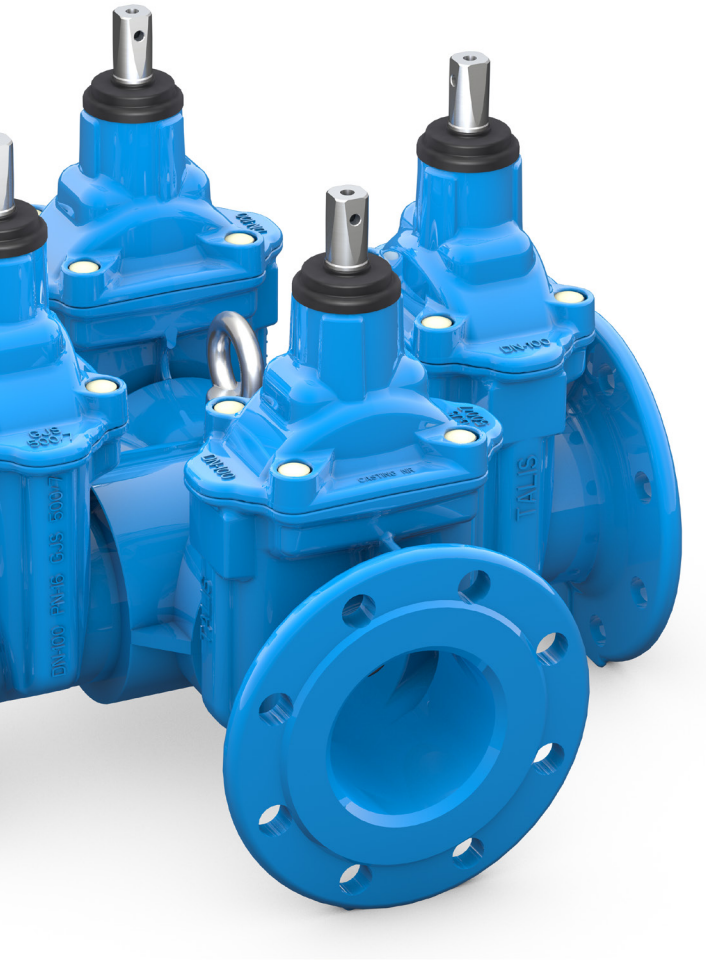

Item	Description	N°	Material	Standard
1	Body	1	EN-GJS-500-7 [2]	EN 1563
2	Bonnet	1	EN-GJS-500-7 [2]	EN 1563
3	Wedge	1	EN-GJS-500-7	EN 1563
4	Wedge coating	1	EPDM [1]	EN 681-1
5	Stem	1	1.4021	EN 10088
6	Wedge lock nut	1	Copper alloy CW617N	EN 12165
7	Body-bonnet gasket	1	EPDM [1]	EN 681-1
8	Lower stem washer	1	Steel + PTFE	-
9	O-ring (stem)	1	EPDM [1]	EN 681-1
10	Stuffing nut (bayonet)	1	Copper alloy CW617N	EN 12165
11	O-ring (stuffing nut)	2	NBR	ASTM D2000
12	O-ring (stuffing nut/bonnet)	1	NBR	ASTM D2000
13	Body bonnet bolting	acc/DN	Steel 12.9 Geomet coated	EN 10213-2 / DIN 912
14	Dust guard	1	EPDM	EN 681-1
15	Square cap	1	EN-GJS-500-7 [3]	EN 1563
16	Square cap bolt	1	Steel 8.8 Geomet coated	EN 10213-2 / DIN 912
17	Square cap plug	1	Lupolen	-
18	Wedge sliding skate [4]	2	Composite	-
22	Locking tabs	3	Composite	-
23	Clamping ring	1	1.4301	EN 10088
24	Upper inclined stem washer	1	Steel + PTFE	-

1) or NBR, depending on the approval and on the application. 2) GSK blue epoxy coating (Ral 5015). 3) black epoxy coating.
4) DN40/50 without wedge sliding skates.

DN	øD (mm)	EN 1092-2 PN10			EN 1092-2 PN16			L (mm)	H1 (mm)	H (mm)	G1 (mm)	G2 (mm)	S (mm)	No. of turns for closing	Weight (kg) INFINI-3	Weight (kg) INFINI-4
		øK (mm)	øG (mm)	n°xd	øK (mm)	øG (mm)	n°xd									
50	165	125	99	4x19	125	99	4x19	357	280	197	207	146	20	14	17	20
65	185	145	118	4x19	145	118	4x19	412	330	237	242	171	20	15	27	34
80	200	160	132	8x19	160	132	8x19	446	360	260	266	188	25	18	34	43
100	220	180	156	8x19	180	156	8x19	487	395	285	297	210	25	21,5	51	63
125	250	210	184	8x19	210	184	8x19	528	465	340	328	232	30	27	67	83
150	285	240	211	8x23	240	211	8x23	588	516	373	378	267	30	32	93	111
200	340	295	266	8x23	295	266	12x23	710	630	460	480	339	35	41,5	165	198
250	400	350	319	12x23	355	319	12x28	838	749	549	588	415	40	43	247	299
300	455	400	370	12x23	410	370	12x28	970	858	630	700	495	50	51	346	417

For version with handwheel, please consult us.

The technical data and performance may be modified without prior notice depending on the technical advances.

INFINI-3 / INFINI-4 - DN50/300 - PN10/16

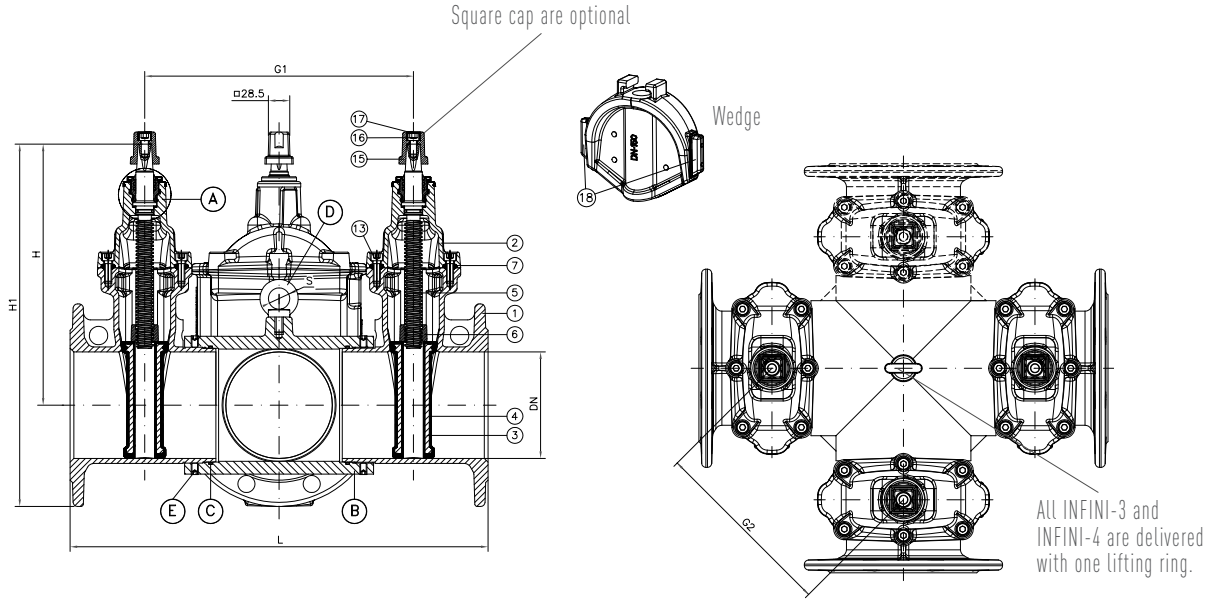



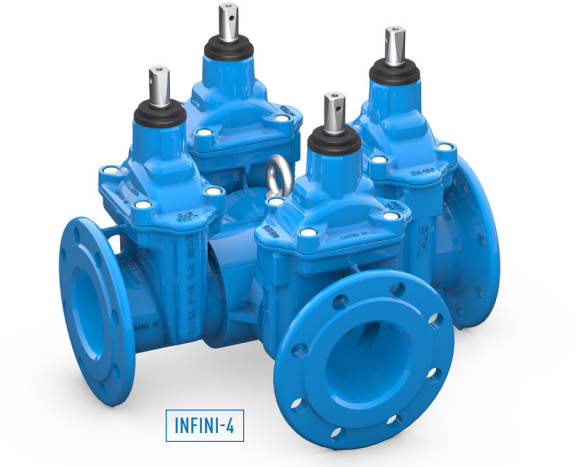

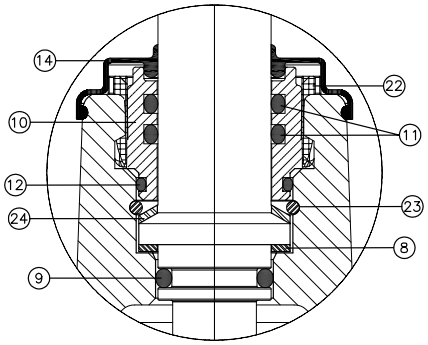

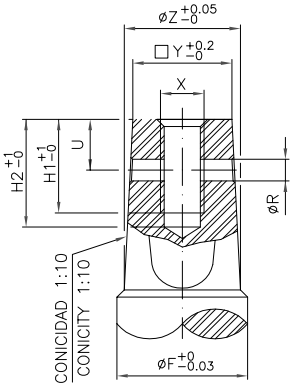

DN	□Y	øZ	øR	U	X	H1	H2	øF
50	14.3	17	5	10	M8	15	18	20
65/80	17.3	21	6	12	M8	15	18	24
100	19.3	23	6	13	M10	15	18	24
125/150	19.3	25	6	13	M10	15	18	26
200	24.3	28.5	6	16	M12	15	18	28.5
250/300	27.3	32	6	14	M12	15	18	32

The technical data and performance may be modified without prior notice depending on the technical advances.

MATERIALS & DIMENSIONS

PE ENDS - DN50/300 - PN10/16

(According to EN1074-2 (annex A) and EN1171 (category 3))

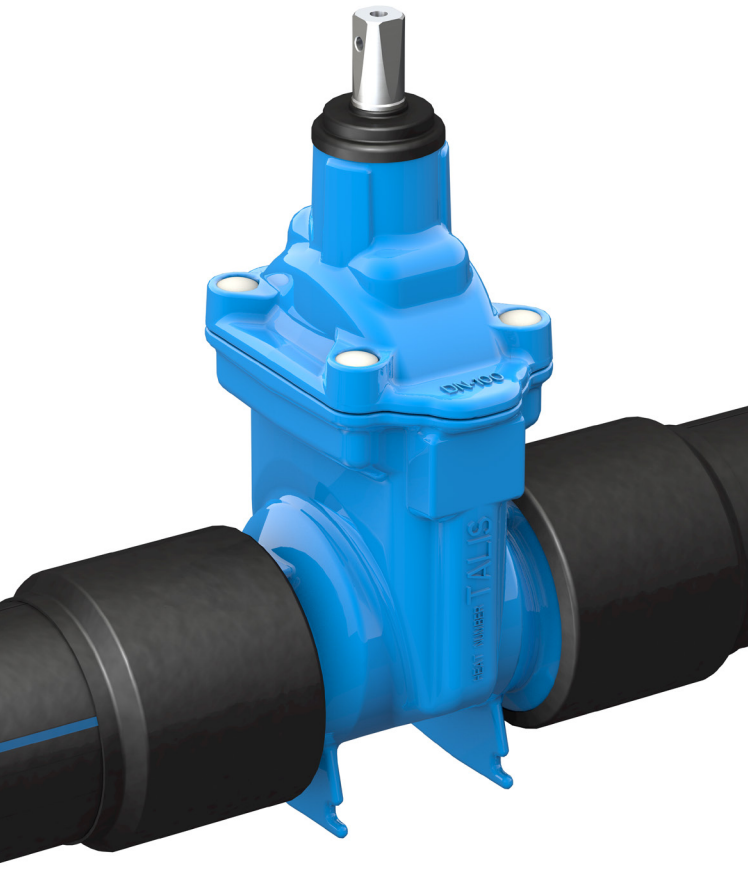

Item	Description	N°	Material	Standard
1	Body	1	EN-GJS-500-7 [2]	EN 1563
2	Bonnet	1	EN-GJS-500-7 [2]	EN 1563
3	Wedge	1	EN-GJS-500-7	EN 1563
4	Wedge coating	1	EPDM [1]	EN 681-1
5	Stem	1	1.4021	EN 10088
6	Wedge lock nut	1	Copper alloy CW617N	EN 12165
7	Body-bonnet gasket	1	EPDM [1]	EN 681-1
8	Lower stem washer	1	Steel + PTFE	-
9	O-ring (stem)	1	EPDM [1]	EN 681-1
10	Stuffing nut (bayonet)	1	Copper alloy CW617N	EN 12165
11	O-ring (stuffing nut)	2	NBR	ASTM D2000
12	O-ring (stuffing nut/bonnet)	1	NBR	ASTM D2000
13	Body bonnet bolting	acc/DN	Steel 12.9 Geomet coated	EN 10213-2 / DIN 912
14	Dust guard	1	EPDM	EN 681-1
15	Locking tabs	3	Composite	-
16	Wedge sliding skate [4]	2	Composite	-
17	Pressure bush	2	S355J2H	-
18	PE pipe [5]	2	Polyethylene	EN 12201-1 & 2
19	O-ring (PE pipe)	4	NBR	ASTM D2000
20	Heat-shrinkable sleeve	2	Polymer	-
21	Square cap	1	EN-GJS-500-7 3)	EN 1563
22	Square cap bolt	1	Steel 8.8 Geomet coated	EN 10213-2 / DIN 912
23	Square cap plug	1	Lupolen	-
24	Clamping ring	1	1.4301	EN 10088
25	Upper inclined stem washer	1	Steel + PTFE	-

1) or NBR, depending on the approval and on the application. 2) GSK blue epoxy coating (Ral 5015). 3) black epoxy coating.
4) DN 40/50 without wedge sliding skates. 5) PE pipe according to EN 12201-1 & 2.

DN*	PE PIPE ød / SDR	MAXIMUM WORKING PRESSURE OF 16 BAR (PFA16)							No. of turns for closing	Weight (kg)	PE PIPE ød / SDR	MAXIMUM WORKING PRESSURE OF 10 BAR (PFA10)							No. of turns for closing	Weight (kg)
		s (mm)	L (mm)	L1 (mm)	P (mm)	C (mm)	H (mm)	h (mm)				s (mm)	L (mm)	L1 (mm)	P (mm)	C (mm)	H (mm)	h (mm)		
40	ø50 / SDR11	4.6	880	215	105	64	180	40	11.5	4.5	-	-	-	-	-	-	-	-	-	-
50	ø63 / SDR11	5.8	880	220	110	64	203	50	14	5.4	ø63 / SDR17	3.7	880	220	110	64	203	50	14	5.2
65	ø75 / SDR11	6.8	900	230	120	74	246	59	15	10	ø75 / SDR17	4.5	900	230	120	74	246	59	15	9.8
80	ø90 / SDR11	8.2	900	237	127	79	270	65	18	11.5	ø90 / SDR17	5.3	900	237	127	79	270	65	18	11
100	ø110 / SDR11	10	900	310	154	82	298	78	21.5	18.2	ø110 / SDR17	6.5	900	310	154	94	298	78	21.5	17.7
100	ø125 / SDR11	11.4	975	310	154	94	294	88	21.5	18.7	ø125 / SDR17	7.4	975	310	154	94	294	88	21.5	18
125	ø140 / SDR11	12.8	1000	350	170	97	353	92	27	27.2	ø140 / SDR17	8.3	1000	350	170	97	353	92	27	26
150	ø160 / SDR11	14.6	1100	381	171	102	390	110	32	34.5	ø160 / SDR17	9.5	1100	381	171	102	383	120	32	32.5
150	ø180 / SDR11	16.4	1100	381	171	102	383	120	32	41.6	ø180 / SDR17	10.6	1100	381	171	102	383	120	32	39
200	ø200 / SDR11	18.2	1100	464	244	160	487	135	41.5	68.5	ø200 / SDR17	11.8	1100	464	244	160	487	135	41.5	66
200	ø225 / SDR11	20.5	1100	464	244	160	477	150	41.5	71	ø225 / SDR17	13.3	1100	464	244	160	477	150	41.5	68
250	ø250 / SDR11	22.8	1350	500	280	160	581	160	43	105	ø250 / SDR17	14.8	1350	500	280	160	581	160	43	100
300	ø315 / SDR11	28.7	1350	500	280	160	660	210	51	182.5	ø315 / SDR17	18.6	1350	500	280	160	660	210	51	173.5

*All gate valves with PE ends are reduced bore. PE pipe according to EN 12201-1 & 2.

The technical data and performance may be modified without prior notice depending on the technical advances.

PE ENDS - DN50/300 - PN10/16

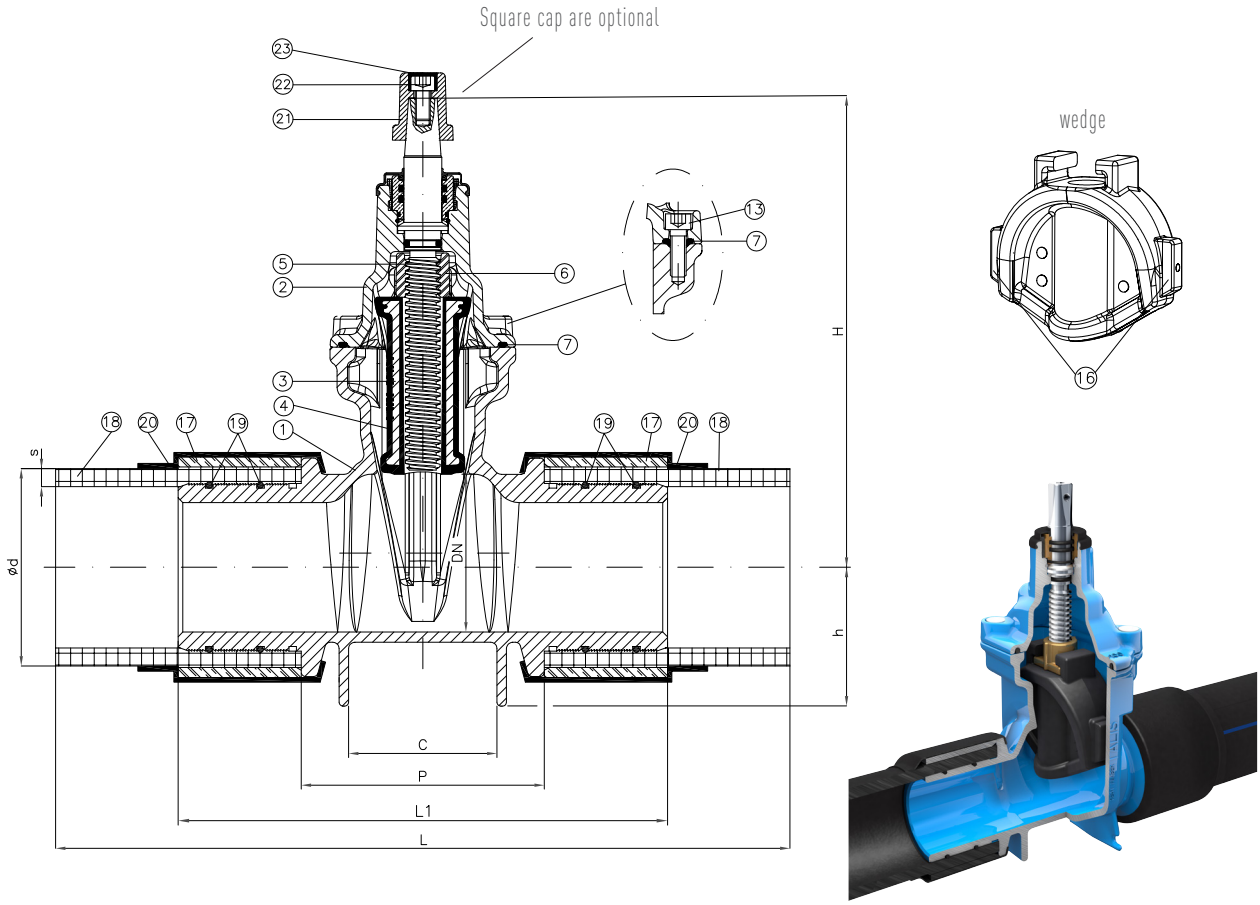

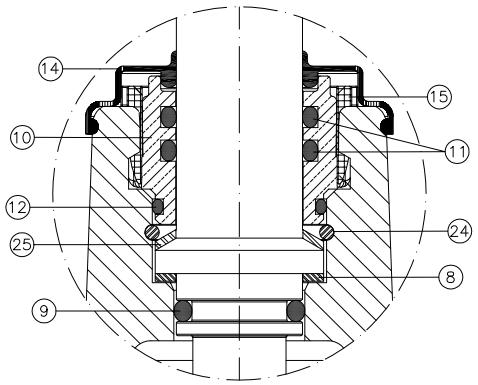

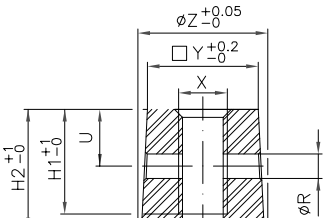

DN	□Y	øZ	øR	U	X	H1	H2	øF
40/50	14.3	17	5	10	M8	15	18	20
65/80	17.3	21	6	12	M8	15	18	24
100	19.3	23	6	13	M10	15	18	24
125/150	19.3	25	6	13	M10	15	18	26
200	24.3	28.5	6	16	M12	15	18	28.5
250/300	27.3	32	6	14	M12	15	18	32

The technical data and performance may be modified without prior notice depending on the technical advances.

MATERIALS & DIMENSIONS

SPIGOT ENDS - DN50/450 - PN10/16

(According to EN1074-2 (annex A) and EN1171 (category 3))

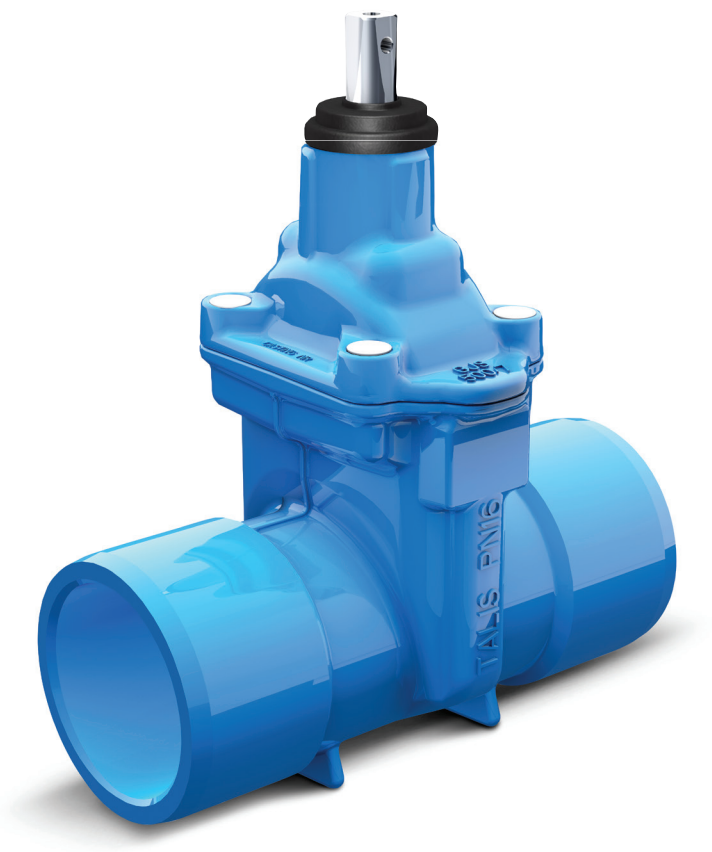

Item	Description	N°	Material	Standard
1	Body	1	EN-GJS-500-7 [2]	EN 1563
2	Bonnet	1	EN-GJS-500-7 [2]	EN 1563
3	Wedge	1	EN-GJS-500-7	EN 1563
4	Wedge coating	1	EPDM [1]	EN 681-1
5	Stem	1	1.4021	EN 10088
6	Wedge lock nut	1	Copper alloy CW617N	EN 12165
7	Body-bonnet gasket	1	EPDM [1]	EN 681-1
8	Lower stem washer	1	Steel+PTFE	-
9	O-ring (stem)	1	EPDM [1]	EN 681-1
10	Stuffing nut (bayonet)	1	Copper alloy CW617N	EN 12165
11	O-ring (stuffing nut)	2	NBR	ASTM D2000
12	O-ring (stuffing nut/bonnet)	1	NBR	ASTM D2000
13	Body bonnet bolting	acc/DN	Steel 12.9 Geomet coated	EN 10213-2 / DIN 912
14	Dust guard	1	EPDM	EN 681-1
15	Handwheel	1	Stamped steel [3]	EN 10130
16	Handwheel washer	1	1.4301	EN 10088 / DIN 9021
17	Handwheel bolt	1	1.4301	EN 10088 / DIN 933
18	Square cap	1	EN-GJS-500-7 [3]	EN 1563
19	Square cap bolt	1	1.4301	EN 10088 / DIN 912
20	Square cap plug	1	Lupolen	-
21	Wedge sliding skate [4]	2	Composite	-
22	Locking tabs	3	Composite	-
23	Clamping ring	1	1.4301	EN 10088
24	Upper inclined stem washer	1	Steel+PTFE	-

1) or NBR, depending on the approval and on the application. 2) Blue epoxy coating (Ral 5015), GSK approved up to DN300.
3) black epoxy coating. 4) DN40/50 without wedge sliding skates.

DN	D (mm) depending on pipe Class							L (mm)	A (mm)	H (mm)	h (mm)	øD1 (mm)	No. of turns for closing	Weight (kg)						
	Class A	Class B	Class C	Class D	Class E	Class F	Others							Class A	Class B	Class C	Class D	Class E	Class F	Others
50	-	67	67	67	67	67	-	250	75	202	40	150	14	-	5,8	5,8	5,8	5,8	5,8	-
60 (65)	-	77	77	77	77	77	-	270	75	242	50	150	15	-	8	8	8	8	8	-
70* (65)	-	89	89	89	89	89	-	270	75	242	50	150	15	-	9,6	9,6	9,6	9,6	9,6	-
80	-	99	99	99	101	101	-	280	70	265	60	200	18	-	10	10	10	10,5	10,5	-
100	119	119	119	119	125	125	126	300	70	290	70	200	21,5	13	13	13	13	14,2	14,2	14
125	149	149	149	149	156	156	-	325	88	345	85	300	27	20	20	20	20	22,2	22,2	-
150	174	174	174	174	-	-	178	350	92	378	105	300	32	24,5	24,5	24,5	24,5	-	-	26,5
200	222	222	222	232	-	-	234	400	100	465	135	400	41,5	40	40	40	46	-	-	47
225 (250)	-	-	-	-	-	-	255	425	106	566	137	400	43	-	-	-	-	-	-	65
250	272	272	280	287	-	-	-	450	102	554	165	400	43	62	62	67	72	-	-	-
300	326	326	330	339	-	-	344	500	103	635	190	500	51	92,5	92,5	96	103	-	-	108
450	-	-	-	-	-	-	508	650	152	1002	270	600	65	-	-	-	-	-	-	324

* Reduced bore version.

The technical data and performance may be modified without prior notice depending on the technical advances.

SPIGOT ENDS - DN50/450 - PN10/16

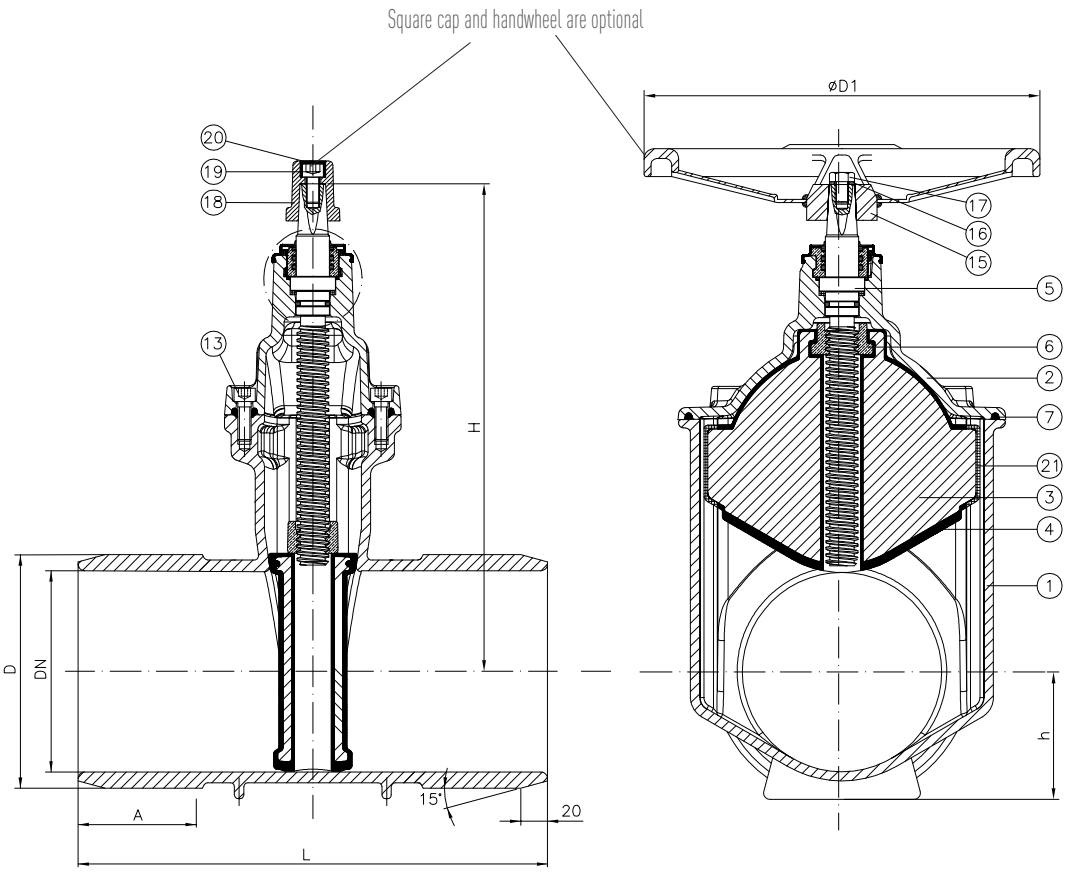

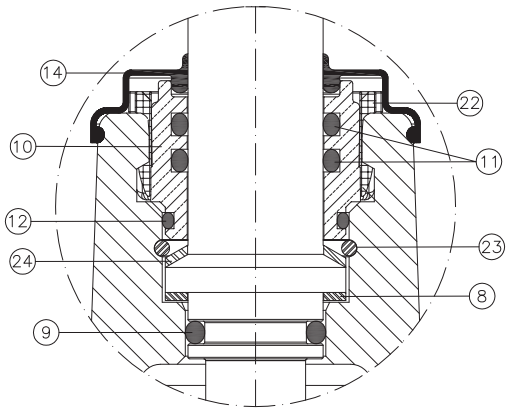

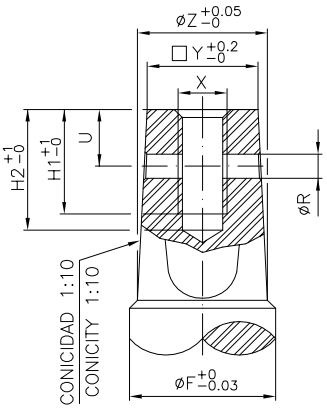

DN	□Y	ØZ	ØR	U	X	H1	H2	ØF
50	14.3	17	5	10	M8	15	18	20
65/80	17.3	21	6	12	M8	15	18	24
100	19.3	23	6	13	M10	15	18	24
125/150	19.3	25	6	13	M10	15	18	26
200	24.3	28.5	6	16	M12	15	18	28.5
250/300	27.3	32	6	14	M12	15	18	32

DN450 see page 13 INFINITY F4/F5

The technical data and performance may be modified without prior notice depending on the technical advances.

MATERIALS & DIMENSIONS

BLS ENDS - DN80/200 - PN10/16

(According to EN1074-2 (annex A) and EN1171 (category 3))

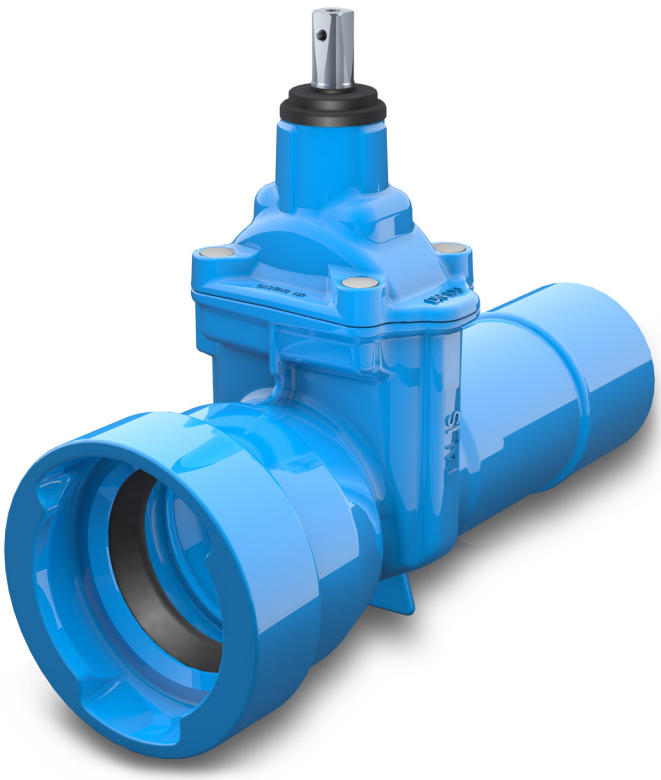

Item	Description	N°	Material	Standard
1	Body	1	EN-GJS-500-7 [2]	EN 1563
2	Bonnet	1	EN-GJS-500-7 [2]	EN 1563
3	Wedge	1	EN-GJS-500-7	EN 1563
4	Wedge coating	1	EPDM [1]	EN 681-1
5	Stem	1	1.4021	EN 10088
6	Wedge lock nut	1	Copper alloy CW617N	EN 12165
7	Body-bonnet gasket	1	EPDM [1]	EN 681-1
8	Lower stem washer	1	Steel + PTFE	-
9	O-ring (stem)	1	EPDM [1]	EN 681-1
10	Stuffing nut (bayonet)	1	Copper alloy CW617N	EN 12165
11	O-ring (stuffing nut)	2	NBR	ASTM D2000
12	O-ring (stuffing nut/ bonnet)	1	NBR	ASTM D2000
13	Body bonnet bolting	acc/DN	Steel 12.9 Geomet coated	EN 10213-2 / DIN 912
14	Dust guard	1	EPDM	EN 681-1
15	Handwheel	1	Stamped steel [3]	EN 10130
16	Handwheel washer	1	1.4301	EN 10088 / DIN 9021
17	Handwheel bolt	1	1.4301	EN 10088 / DIN 933
18	Square cap	1	EN-GJS-500-7 3)	EN 1563
19	Square cap bolt	1	Steel 8.8 Geomet coated	EN 10213-2 / DIN 912
20	Square cap plug	1	Lupolen	-
21	Wedge sliding skate [4]	2	Composite	-
22	Locking tabs	3	Composite	-
23	Clamping ring	1	1.4301	EN 10088
24	Upper inclined stem washer	1	Steel + PTFE	-
25	Tyton gasket	2	EPDM	EN 681-1

1) or NBR, depending on the approval and on the application. 2) GSK blue epoxy coating (Ral 5015) 3) black epoxy coating.
4) DN50 without wedge sliding skates.

DN	L (mm)	M (mm)	øB (mm)	N (mm)	E (mm)	øC (mm)	h (mm)	H (mm)	øD1 (mm)	No. Of turns for closing	Weight (kg)
80	431	170	156	261	78	97.5	78	260	200	18	15.2
100	465	183	178	282	83	118	89	285	200	21.5	22.1
125	483	193	208	290	84	144	104	340	300	27	28.2
150	506	202	236	304	86	170	118	373	300	32	35.1
200	555	220	296	335	97	221.5	148	460	400	41.5	59.5

Each Infinity BLS is delivered with a locking kit for the socket end (see next page).

The technical data and performance may be modified without prior notice depending on the technical advances.

BLS ENDS - DN80/200 - PN10/16

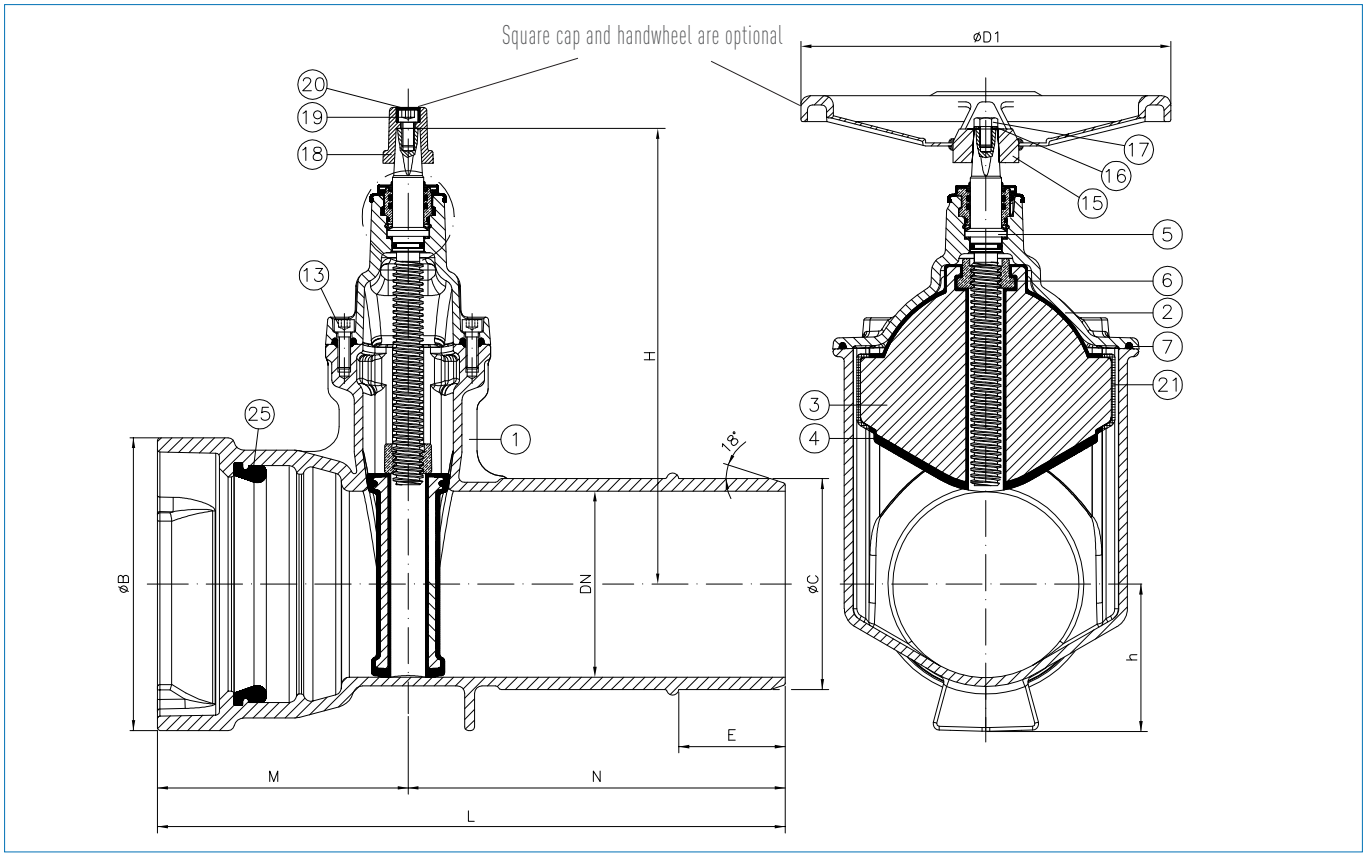

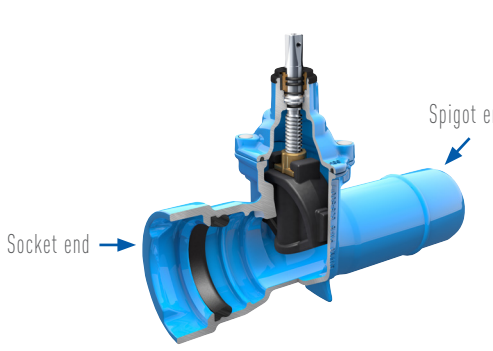



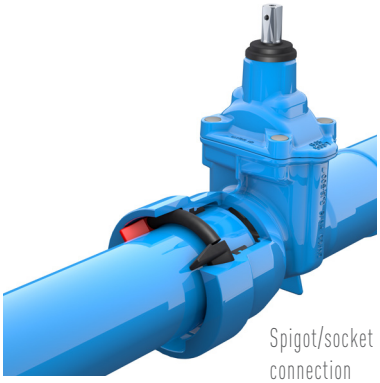

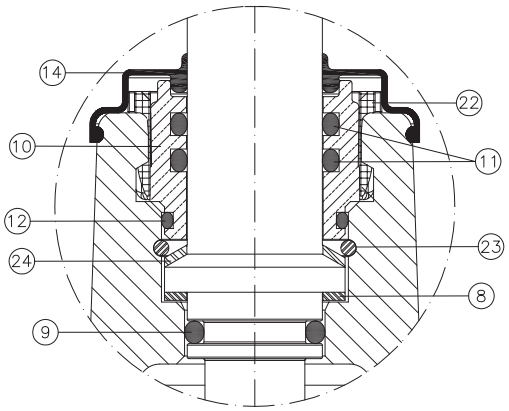

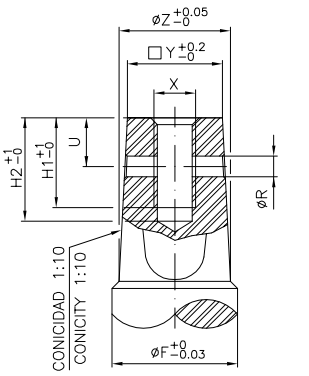

DN	□Y	øZ	øR	U	X	H1	H2	øF
80	17.3	21	6	12	M8	15	18	24
100	19.3	23	6	13	M10	15	18	24
125/150	19.3	25	6	13	M10	15	18	26
200	24.3	28.5	6	16	M12	15	18	28.5

The technical data and performance may be modified without prior notice depending on the technical advances.

ACTUATION METHODS & ACCESSORIES

BELGICAST offers a wide variety of actuation methods that will allow to choose the best option for each installation.

The actuation can be made manually or by means of an electrical actuator with or without a gearbox. Also, we offer solutions for buried installations. Pneumatically actuated gate valves with a special design are also available for those installations where speed of actuation is a priority.

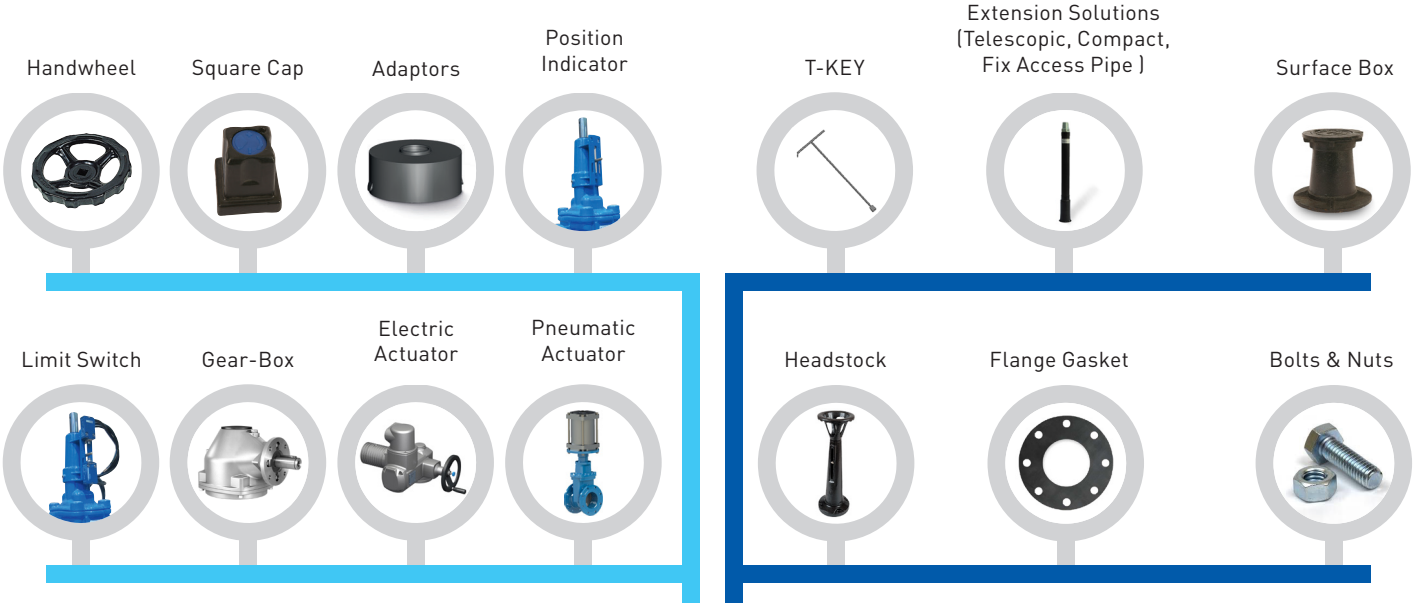



Valve with bare shaft

Manual actuation

Our resilient seated gate valves are designed to be operated with handwheel or T-key. In that later case, they need to be fitted with square cap. BELGICAST offers handwheels with the right dimensions, according to the DN and operating torque. Our standard handwheels are made of pressed steel and we also offer ductile iron as an option. Regarding square cap tops, our products comply with the different national practices and standards. A cap plug (1), inserted inside, indicates the closing direction. Blue color for clockwise closing direction, red color for anti-clockwise closing direction.

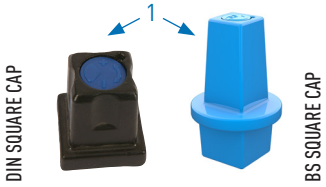

Buried installations

One special case of manual actuation occurs when the valve is buried and the actuation has to be done from the surface. For those cases special stem extensions, fixed or telescopic, are offered to fit with different national practices and standards. We can offer customised solutions for each country when requested. For example, BELGICAST offers adapters to fit plastic or casting pipes for the French market and stem extensions according to GW 336 for the German market.



Electrical actuation

Another option is to operate the gate valve by means of an electric actuator. This solution also offers the possibility of installing a remote control, that allows the final user to monitor the operations of the valves. Special versions of the gate valves prepared for the actuator are equipped with top flanges according to ISO 5210. Actuators from different suppliers can be installed on this standard flange, which gives the customer the freedom to choose their actuator. BELGICAST can provide the operating torques of the gate valves as well as guidance in choosing the right actuator for each DN.



The technical data and performance may be modified without prior notice depending on the technical advances.

INSTALLATION AND OPERATION INSTRUCTIONS

GOOD TO KNOW BEFORE INSTALLATION

Before installation, in addition to the few informations given below, it is important to read the IOM manual.

Storage

- Leave the rubber wedge slightly open: if it is closed completely, the rubber suffers unnecessary compression. Remove the flange cover just before the installation.
- The gate valves should preferably be stored under cover. A long storage under extreme weather conditions can cause alterations of the coating and seals.

Assembly in pipe

- The assembly of the valve in the pipe is independent of the flow direction.
- Take care of the integrity of the coating by avoiding shocks and friction which, by damaging the coating, could lead to the start of corrosion.
- When connecting the valve to the pipe, avoid the transmission of stress from the pipe to the valve body. For that, any pipe or pipe sections or valve not yet finally clamped in place must be provisionally supported to prevent abnormal stress on one or both sides of the valve.
- Tighten screws gradually in a star-shaped pattern, respecting the tightening torques.
- Once the valve is assembled, the threads of the bolts/rods should be greased with a graphite based waterproof grease (MOLYCOTE or similar) to prevent corrosion and facilitate subsequent dismantling operations.

Operation

- Each valve must be operated in respect of the operating torques given in our IOM manual, by means of a handwheel or a T-key ("Ring key and bar" is strictly prohibited). Do not use the valves for regulating mode.
- Do not use the valves with EPDM rubber with gaseous fluids such as propane, butane, natural gas and also with hydrocarbons fluids like petrol, diesel, ...

RECOMMENDED POSITIONS FOR GATE VALVES WITH FLANGES

De DN40 UP TO DN300:

1) Ideal position: vertical stem, horizontal flow



2) Horizontal stem, horizontal flow

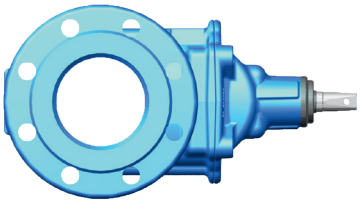

3) Horizontal stem, vertical flow

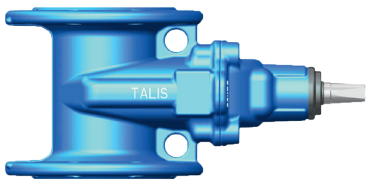

De DN350 UP TO DN700:

1) Ideal position: vertical stem, horizontal flow



2) Oblique stem, horizontal flow

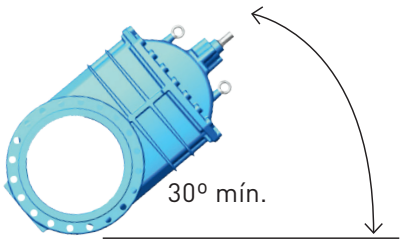

The technical data and performance may be modified without prior notice depending on the technical advances.

EUROPEAN DIRECTIVE



European directive 2014/68/EU (PED) must be respected in all the countries of the European Union for all equipment under pressure. Valves which are subjected to this European directive are the object of a «CE» marking and also a CE declaration of conformity.

Are excluded from the scope of this directive the networks for the supply, distribution and discharge of water and associated equipment and headraces such as penstocks, pressure tunnels, pressure shafts for hydroelectric installations and their related specific accessories. In this context:

- "water" means: potable water, waste water and effluent, and sewage,
- "Networks and associated equipment" means: complete systems for the supply distribution and discharge of water. They extend up to the point of use in buildings, industrial sites and plants, and include equipment closely related to these networks such as water meter and line valves. Pressure vessels, such as expansion vessels, however are not considered to be part of such 'networks and associated equipment' and are therefore not excluded.

Within the scope of the directive, the requirements on resilient seated gate valves are given in the table beside in the case of liquid from group 2.

For the gate valves which are subjected to "CE" marking (see table beside), the document of "CE" declaration of conformity is available on request.

DN	Fluid Group	Fluid Type	For PN/PS max = 16 bar		For PN/PS max = 25 bar	
			CATEGORY	CE MARKING	CATEGORY	CE MARKING
40	2	Liquid having vapor pressure max at 1513 mbar, at 70°C max.	Art 4, Par 3	na*	Art 4, Par 3	na*
50	2		Art 4, Par 3	na*	Art 4, Par 3	na*
60	2		Art 4, Par 3	na*	-	-
65	2		Art 4, Par 3	na*	Art 4, Par 3	na*
80	2		Art 4, Par 3	na*	Art 4, Par 3	na*
100	2		Art 4, Par 3	na*	Art 4, Par 3	na*
125	2		Art 4, Par 3	na*	Art 4, Par 3	na*
150	2		Art 4, Par 3	na*	Art 4, Par 3	na*
200	2		Art 4, Par 3	na*	Art 4, Par 3	na*
250	2		Art 4, Par 3	na*	Cat 1	Yes
300	2		Art 4, Par 3	na*	Cat 1	Yes
350	2		Cat 1	Yes	-	-
400	2		Cat 1	Yes	-	-
450	2		Cat 1	Yes	-	-
500	2		Cat 1	Yes	-	-
600	2		Cat 1	Yes	-	-
700	2		Cat 1	Yes	-	-

(*): according to the max working pressure defined, max temperature defined, and fluid group defined, the "CE marking" is not necessary in the present case.

The technical data and performance may be modified without prior notice depending on the technical advances.



The technical data and performance may be modified without prior notice depending on the technical advances.



BELGICAST is the undisputed Number One for water transport and water flow control. BELGICAST has the best solutions available in the fields of water and energy management as well as for industrial and communal applications. We have numerous products for comprehensive solutions for the whole water cycle – from hydrants, butterfly valves and knife gate valves through to needle valves. Our experience, innovative technology, global expertise and individual consultation processes form the basis for developing long-term solutions for the efficient treatment of the vitally important resource "water".

BELGICAST
Polígono Industrial La Cruz,
Parcela P-4-1, 48196 Lezama
Bizkaia, SPAIN
PHONE +34 94 488 91 00
FAX +34 94 488 91 25
E-MAIL belgicast@belgicast.es
INTERNET www.belgicast.eu

PBR_RGV241223_INFINITY_EN

Note: Information and specifications may be changed without notification at any time.
Copyright: No copying without express written permission of BELGICAST.
BELGICAST is a Registered Trademark.

BELGICAST