BELGICAST

Product brochure

THREADED ENDS
resilient seated gate valve



TECHNICAL PARAMETERS

THREADED ENDS

Isolation resilient seated gate valves, threaded ends. With wedge fully encapsulated in elastomer, for ON/OFF duty under maximal working pressure of 16 bar, and operation by means of handwheel or T-key.



DN20
DN25
DN32



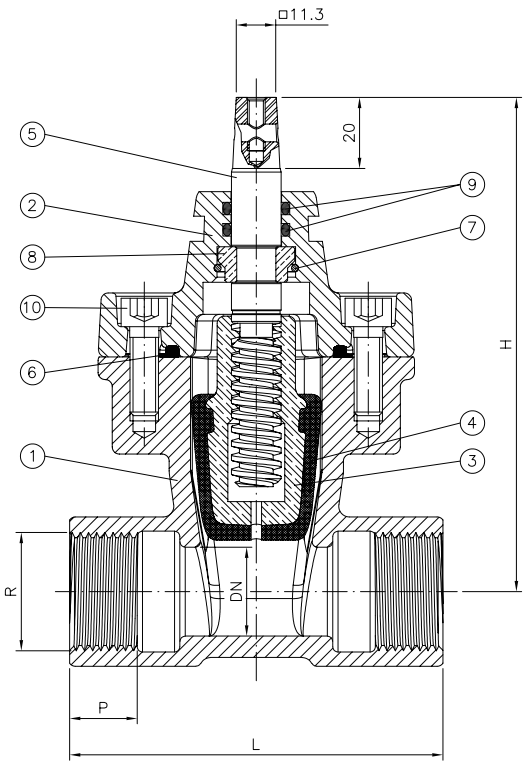

DIMENSION

DN	G(inch) BSP thread	L(mm) end-end	P (mm)	H (mm)	Nr. Turns for closing
20	3/4"	95	15	137	5
25	1"	105	19	139	6,5
32	1 1/4"	120	24	143	8

MARK	DENOMINATION	MATERIAL
1	Body	GJS 500/7
2	Bonnet	GJS 500/7
3	Wedge	CuZn40 Pb2
4	Wedge coating	EPDM
5	Stem	X20 Cr13 (1.4021)
6	Gasket	EPDM
7	Fix ring	X12 CrNi17 7
8	Washer	Bronze
9	O ring	NBR
10	Screws	8.8 Carbon steel Geomet

The technical data and performance may be modified without prior notice depending on the technical advances.

FEATURES

- Threaded connection BSP acc. to EN10226-1 or EN ISO 228-1 (NPT threads upon request).
- Bi-directional flow.
- Low pressure loss.
- Hydraulic tests according to EN-12266-1, Class A.
- Designed to EN1171.
- Coating thickness:250 microns, both interior and exterior.
- Face to face distance according to EN16722 SERIES M4.
- Clockwise closing (CWC) as standard.
- Seal and gasket body cover in EPDM EN 681-1.
- Stem in Stainless steel X20Cr13.

*All valves will be supplied plastic plugs in the threads.

APPLICATIONS

Water transmission
Water distribution network
Fire protection network
Water treatment
Irrigation
House connection
Dams and hydro power
Industrial water applications

DN40
DN50



DIMENSION

DN	G(inch) BSP thread	L(mm) end-end	P (mm)	H (mm)	Nr. Turns for closing
40	1 1/2"	130	29	195	8
50	2"	150	39	213	10

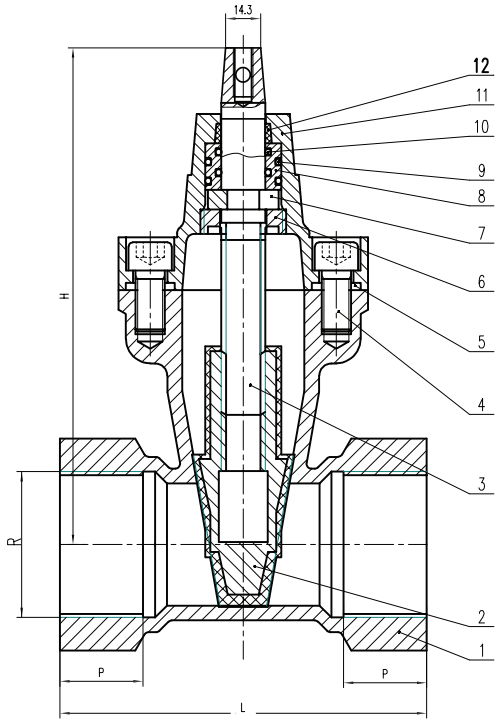

MARK	DENOMINATION	MATERIAL
1	Body	GJS 500/7
2	Wedge	GJS 500/7 / EPDM
3	Stem	X20 Cr13 (1.4021)
4	Screws	8.8 Carbon steel Geomet
5	Gasket	EPDM
6	Lock nut	SS304
7	Retainer rings	Brass
8	Seal ring	Brass
9	O ring	EPDM
10	O ring	EPDM
11	Bonnet	GJS 500/7
12	Dust ring	EPDM

The technical data and performance may be modified without prior notice depending on the technical advances.



BELGICAST is the undisputed Number One for water transport and water flow control. BELGICAST has the best solutions available in the fields of water and energy management as well as for industrial and communal applications. We have numerous products for comprehensive solutions for the whole water cycle – from hydrants, butterfly valves and knife gate valves through to needle valves. Our experience, innovative technology, global expertise and individual consultation processes form the basis for developing long-term solutions for the efficient treatment of the vitally important resource "water".

BELGICAST
Polígono Industrial La Cruz,
Parcela P-4-1, 48196 Lezama
Bizkaia, SPAIN
PHONE +34 94 488 91 00
FAX +34 94 488 91 25
E-MAIL belgicast@talis-group.com
INTERNET www.belgicast.eu

PBR_RGV20230425_THREADED ENDS_EN

Note: Information and specifications may be changed without notification at any time.
Copyright: No copying without express written permission of BELGICAST
BELGICAST is a Registered Trademark.

BELGICAST