BELGICAST
WATER IS LIFE

Dual plate check valves

Models C, B and EMG









CHECK VALVES

DUAL PLATE CHECK VALVES

A Check Valve is designed to protect your pumps and network against flow inversion. BELGICAST provides a wide range of check valves to meet the many factors that determine the choice of a design.

The dual plate check valve is one of the most compact check valves. When fluid enters the valve, the pressure causes the doors to open, stretching the spring. When the flow stops, the spring returns to its compressed state, making the plates return to the closed position, ensuring a quick closing.

BELGICAST Dual Plate check valves offer a wide range of possibilities according to your applications and network operating conditions. Maximum working temperatures depend on materials selection.



MODEL B

- Face to face dimension according to API-594.
- DN50 up to DN1000.
- Installation between flanges PN10, PN16, PN25, PN40 or ANSI-150, ANSI-300, ANSI-600.
- Maximum working pressure 100 bar depending on selected material.
- Versions in cast iron and welded steel protected by epoxy powder coating.
- Minimum back pressure to ensure water tightness 0.5 bar.
- Wafer version in standard, flanged upon request.



MATERIALS

- **Body:**
  ASTM A216 Gr WCB, ASTM A351 CF8M, ASTM CF3M, ASTM A995 5A
- **Plates:**
  ASTM A216 Gr WCB, ASTM A351 CF8M, ASTM CF3M, ASTM A995 5A
- **Shafts:**
  AISI-316L
- **Springs:**
  AISI-316, Inconel 625
- **Liner:**
  EPDM, NBR, Heat EPDM, Viton

For **special applications** such as desalination plants, BELGICAST provides a Dual Plate check valves with extremely resistant material (Body and plates in Duplex A995 5A, shaft in ASTM A182 F55, springs in Inconel 625 and Liner in EPDM).

DIMENSIONS

Please refer page 4.

The technical data and performance may be modified without prior notice depending on the technical advances.

CHECK VALVES

MODEL C

- Short face to face dimension according to ISO 5752, EN 558 series 16 and DIN3202 K3.
- DN40 up to DN1400.
- Installation between flanges PN10, PN16, PN25, PN40 or ANSI-150.
- Maximum working pressure 40 bar depending on selected materials. For higher pressure, model B has to be considered.
- Versions in ductile iron and welded steel protected by epoxy powder coating.
- Minimum back pressure to ensure water tightness 0.5 bar.
- Wafer version in standard, flanged upon request.

MATERIALS

- **Body:**
  ductile iron GGG-40, ASTM A216 Gr WCB, ASTM A351 CF8M, ASTM CF3M, ASTM A995 5A
- **Plates:**
  ductile iron GGG-40, ASTM A216 Gr WCB, ASTM A351 CF8M, ASTM CF3M, ASTM A995 5A
- **Shafts:**
  AISI-316L, ASTM A182 F55
- **Springs:**
  AISI-316, Inconel 625
- **Liner:**
  EPDM, NBR,
  Heat EPDM, Viton

DIMENSIONS

Please refer page 5.



MODEL EMG

- Short face to face dimension according to ISO 5752, EN 558 series 16 and DIN3202 K3.
- DN40 up to DN400.
- Centring lugs for installation between flanges PN6, PN10, PN16, ANSI-150, BS Table E/D, JIS 5K/10K.
- Maximum working pressure 16 bar.
- Minimum back pressure to ensure water tightness 0.5 bar.
- Internal fully lined body with NBR or EPDM, no flange gasket required.
- Cassette type internal parts, allowing easy replacement (plates, shaft and springs). No external holes or plugs in the body.
- Protected with blue epoxy powder coating.

MATERIALS

- **Body:**
  ductile iron GGG-40
- **Plates:**
  AISI-316 (ASTM A8905A for special applications)
- **Shafts:**
  AISI-316L (ASTM A182 F55 for special applications)
- **Springs:**
  AISI-316 (Inconel 625 for special applications)
- **Seat:**
  EPDM, NBR

DIMENSIONS

Please refer page 6.



The technical data and performance may be modified without prior notice depending on the technical advances.

DIMENSIONS

MODEL B DUAL PLATE CHECK VALVE



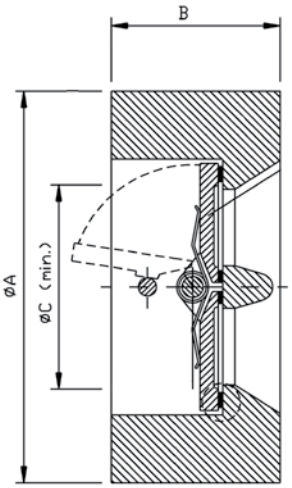

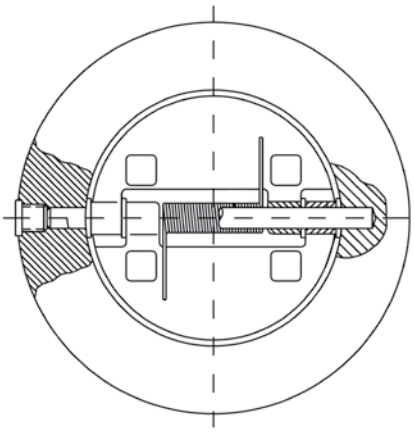

DN		CLASS 150			CLASS 300			CLASS 600			PN 10			PN 16			PN 25			PN 40			PN 64			PN 100		
mm	"	A	B	C	A	B	C	A	B	C	A	B	C	A	B	C	A	B	C	A	B	C	A	B	C	A	B	C
50	2	104	60	28	108	60	28	108	60	28	108	60	28	108	60	28	108	60	28	108	60	28	114	60	28	120	60	28
65	2 1/2	122	67	-	128	67	-	128	67	-	128	67	-	128	67	-	128	67	-	128	67	-	138	67	-	146	67	-
80	3	136	73	40	143	73	40	146	73	40	143	73	40	143	73	40	143	73	40	143	73	40	149	73	50	155	73	50
100	4	169	73	88	179	73	88	190	80	88	163	73	88	163	73	88	169	73	88	169	73	88	175	80	88	182	80	88
125	5	194	83	110	215	86	110	-	-	-	194	83	110	194	83	110	194	83	110	194	83	110	-	-	-	-	-	-
150	6	219	98	112	248	98	112	265	137	105	219	98	112	219	98	112	224	98	112	224	98	112	248	137	105	258	137	105
200	8	275	127	175	306	127	175	318	165	180	275	127	175	275	127	175	284	127	175	293	127	175	310	165	180	325	165	180
250	10	338	146	210	360	146	210	397	213	230	329	146	210	329	146	210	338	146	210	355	146	210	356	213	230	390	213	230
300	12	408	181	270	419	181	270	455	229	280	380	181	270	380	181	270	402	181	270	419	181	270	425	229	280	460	229	280
350	14	450	184	300	484	222	320	490	273	315	440	184	300	440	184	300	460	184	300	476	222	320	487	273	315	512	273	315
400	16	514	191	372	538	232	370	562	305	360	490	191	372	495	191	372	514	191	372	548	232	370	544	305	360	572	305	360
450	18	548	203	416	595	264	430	610	362	402	540	203	416	556	203	416	565	203	416	572	264	430	588	362	402	628	362	402
500	20	605	219	560	652	292	460	680	368	450	595	219	560	618	219	560	625	219	560	630	292	460	658	368	450	706	368	450
600	24	716	222	580	772	318	550	788	438	540	696	222	580	735	222	580	733	222	580	748	318	550	766	438	540	818	438	540
*700	28	830	305	640	895	370	680	-	-	-	807	305	640	807	305	640	834	305	640	853	370	680	-	-	-	-	-	-
750	30	880	305	662	950	370	720	-	-	-	-	-	-	-	-	-	-	-	-	-	-	-	-	-	-	-	-	-
*800	32	937	305	750	1000	420	770	-	-	-	915	305	750	915	305	750	942	305	750	974	420	770	-	-	-	-	-	-
900	36	1046	368	830	1115	480	880	-	-	-	1015	368	830	1009	368	830	-	-	-	-	-	-	-	-	-	-	-	-
1000	40	-	-	-	-	-	-	-	-	-	1124	431	890	1124	431	890	1154	431	890	1194	540	995	-	-	-	-	-	-
1200	48	1380	524	1145	1486	630	1190	-	-	-	1340	524	1145	1340	524	1145	1364	524	1145	1400	630	1190	-	-	-	-	-	-

The technical data and performance may be modified without prior notice depending on the technical advances.

DIMENSIONS

MODEL C DUAL PLATE CHECK VALVE



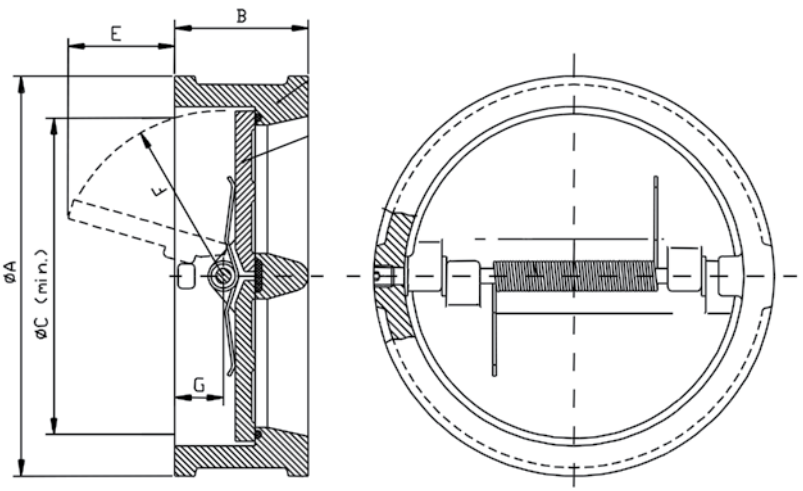

DN		A					B					C					E	F	G	WEIGHT (kg) PN10/16	WEIGHT (kg) PN25
mm	"	PN 10	PN 16	ANSI 125/150*	PN25	PN 40	PN 10	PN 16	ANSI 125/150	PN25	PN40	PN 10	PN 16	ANSI 125/150	PN25	PN40					
40	1½	94		-	94	94	43**					55					12	33	21	1	1
50	2	108		104	108	108	43					55					12	33	21	1.3	1.3
65	2½	128		124	128	--	46					58,5					12	33	18,7	2.4	2.4
80	3	143		136	143	143	64					71					18	41	30,8	3.2	3.2
100	4	163		169	169	169	64					96					28	52	30,2	4.2	4.2
125	5	194		194	194	194	70					125					35	70	30,3	7	7
150	6	219		219	224	224	76					128					33	70	37	9	9
200	8	275		275	284	293	89					192					60	104	36	15	15
250	10	329		338	338	355	114					244					81	126	48	27	27
300	12	380		408	402	419	114					295					100	153	49	34	34
350	14	438		450	458	***	127				***	320				***	108	168	57	55	55
400	16	490		514	514	***	140				***	380				***	137	195	58	70	70
450	18	540	556	543	***	***	152			***		420			***		152	217	65	100	***
500	20	595	618	605	***	***	152			***		480			***		175	247	65	120	***
600	24	696	735	716	***	***	178			***		585			***		222	299	77	180	***
700	28	807	807	830	***	***	229			***		690			***		250	352	103	260	***
800	32	917	912	937	***	***	241			***		780			***		290	395	107	350	***
900	36	1015	1009	1046	***	***	241			***		850			***		332	445	112	520	***
1000	40	1124	1124	1216	***	***	300			***		940			***		332	483	152	760	***
1200	48	1340	1340	1380	***	***	350			***		1150			***		442	601	159	1200	***
1400	56	1547	1540	1603	***	***	390			***		1360			***		515	690	147	1827	***

* Only for installation between flanges
** Figure not according to ISO 5752
*** Model B available, dimensions on page 4

The technical data and performance may be modified without prior notice depending on the technical advances.

DIMENSIONS

MODEL EMG DUAL PLATE CHECK VALVE



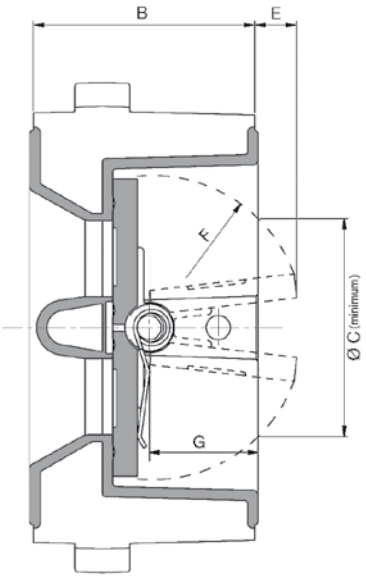

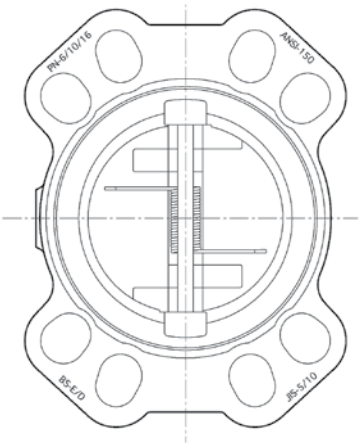

DN (mm)	DN (inch)	B	C	E	F	G
40	1 1/2	33	43	8	23,5	15
50	2	43	49	10	29	21
65	2 1/2	46	64	14	35,5	22
80	3	64	70	11	42	30
100	4	64	91	21	51,5	30
125	5	70	125	38	66	32
150	6	76	148	47	77	32
200	8	89	200	64	101	35
250	10	114	240	78	129	48
300	12	114	300	103	158	50
350	14	127	320	108	168	57
400	18	140	380	137	195	58

The technical data and performance may be modified without prior notice depending on the technical advances.

DUAL PLATE CHECK VALVES

DESALINATION SOLUTIONS

One of the main problems that engineering companies face is the exposure of commonly handled long-life equipment to high salinity fluid, such as seawater and brine, reaching TDS levels higher than 50.000ppm.

For High pressure valves and steel wetted parts, BELGICAST provides high quality **SUPER DUPLEX** with Pitting Resistance Equivalent Number (PREN = Cr(%) + 3,3 x (Mo+0.5W) (%) + 16 x N(%)) > 40 and CF > 35.

MATERIALS OF CONSTRUCTION

Body: A351 CF8M
ASTM A995 Gr.5A Super Duplex (PREN>40)

Plates: A351 CF8M
ASTM A995 Gr.5A Super Duplex (PREN>40)

Shafts: AISI-316L
ASTM A182 F55

Springs: Inconel 625

Liner: EPDM

Other materials on request.



HIGH PRESSURE



MODEL B

LOW PRESSURE



MODEL C



MODEL C
RUBBER-LINED



MODEL EMG
RUBBER-LINED

OTHER VERSIONS







MODEL C FLANGED VERSION

The technical data and performance may be modified without prior notice depending on the technical advances.

RUBBER LINER AND APPLICATIONS FOR DUAL PLATE CHECK VALVES



GOOD TO KNOW

MATERIAL	ISO	CHEMICAL NAME		WORKING TEMP. (°C)
EPDM	EPDM	Ethylene-Propylene Terpolymer	Water, weak mineral acids and basis, water ketones, esters	–10° +80°
EPDM-HT			High temperature	–10° +130°
			Normative FDA	–20° +130°
NITRILE	NBR	Acrylonitrile-Butadiene Copolymer	Oils, Greases, Fuel, Gas oil, CO_2, CO, H_2	–10° +80°
VITON	FPM	Hexafluorpropylene vinylidene fluoride copolymer	Best chemical resistence	–15° +200°
		HFP-VDF-TFE terpolymer	Oxygenated Gasoline	–5° +70°
NATURAL	NR	1,4 cis Polyisoprene	Very good abrasion resistance	–15° +70°
SILICONE	MVQ	Poly methyl vinyl siloxane	Highest and lowest temperature resistance	–60° +200°
STEAM SILICONE			Steam water	–60° +140°

Guidance information provided by rubber suppliers.
Final performance of the rubber will depend on media composition.

The technical data and performance may be modified without prior notice depending on the technical advances.

RUBBER LINER AND APPLICATIONS FOR DUAL PLATE CHECK VALVES

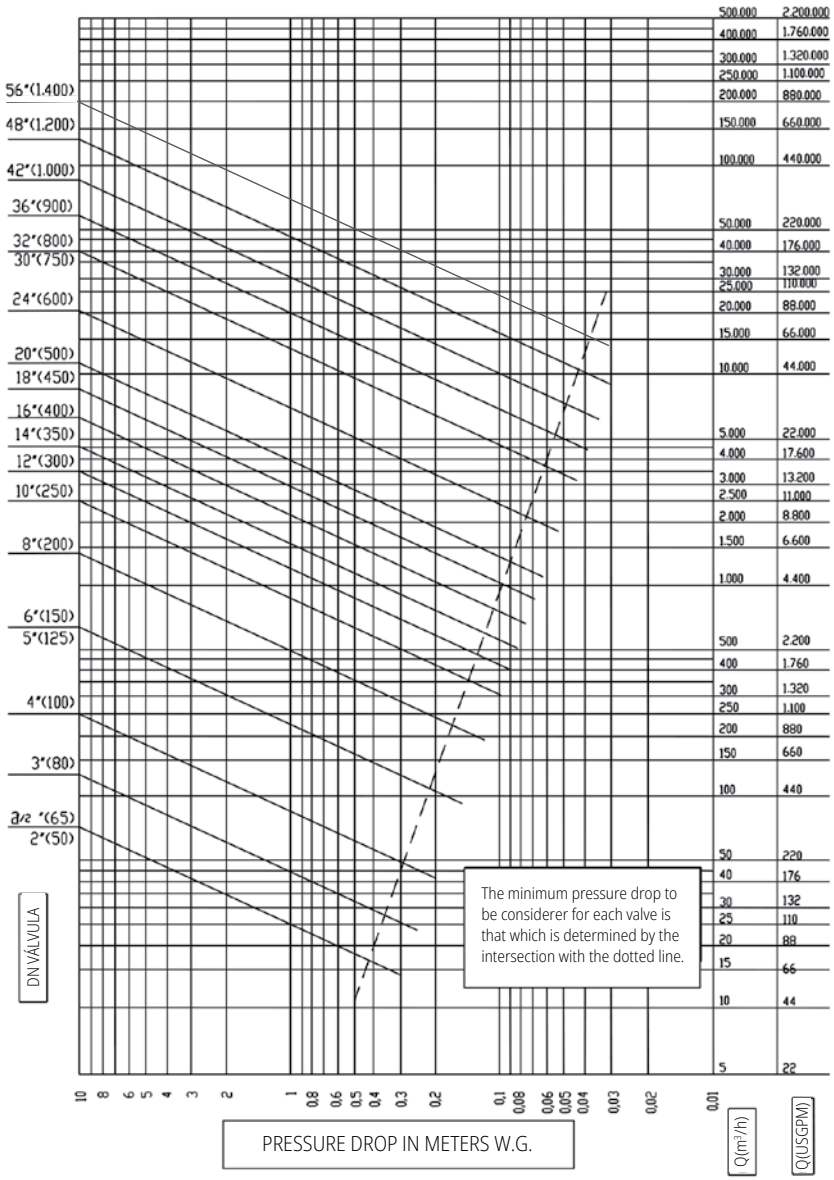

DN (mm)	40	50	65	80	100	125	150	200	250	300
Flow coefficient (CV)	90	90	90	150	300	800	800	1700	3000	4000
Flow factor m3/h (Kv)	77,4	77,4	77,4	129	258	689	689	1462	2585	3448
Minimum pressure to open the valve (in mmWC) in horizontal position	300	300	300	300	200	150	150	140	140	127
Minimum pressure to open the valve (in mmWC) in vertical position and upwards	700	580	590	420	380	380	380	380	350	370

DN (mm)	350	400	450	500	600	700	800	900	1000	1200	1400
Flow coefficient (CV)	5350	7400	10000	13000	24000	40000	45500	62000	90000	130000	200000
Flow factor m3/h (Kv)	4611	6379	8618	11200	20689	34480	39222	53445	77583	112068	32,2000
Minimum pressure to open the valve (in mmWC) in horizontal position	130	100	70	70	60	60	50	50	40	30	25
Minimum pressure to open the valve (in mmWC) in vertical position and upwards	380	350	330	340	320	400	480	430	590	520	480

The technical data and performance may be modified without prior notice depending on the technical advances.

INSTALLATION AND OPERATION INSTRUCTIONS

POSITIONIING IN PIPE

Dual Plate check valves are installed between pipe flanges with bolts or through studs, placing applicable gaskets between valve and flange faces (Wafer assembly).

Centering of the valve between the flanges:

- valve in horizontal position (upward or downward flow): the valve is placed on the lower flange and then it can be centered manually easilly.
- valve in vertical position: the external diameter of the valve is adjusted with the internal diameter of the rods. It is recommended to assembly first the lower rods in the flanges and place the valve on them in order to facilitate the centering of the valve, as shown in the following draft:

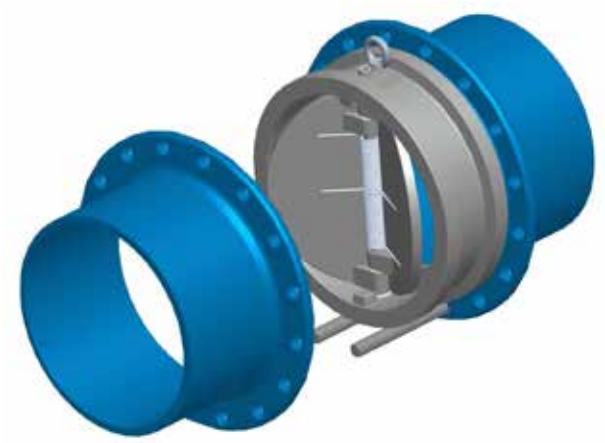

Once the valve is placed on the rods, proceed manually to the centering of the valve. From DN-200 up, the valves are equipped with a lifting eye bolt in order to make easier this operation.

FLANGE SIZE

The flange diameter must be greater than the minimum value (C) stated in dual plate check valve size data sheets.

If the inside diameter of the flanges should be smaller than the stated diameter, discs will be prevented from opening (see fig. 1).

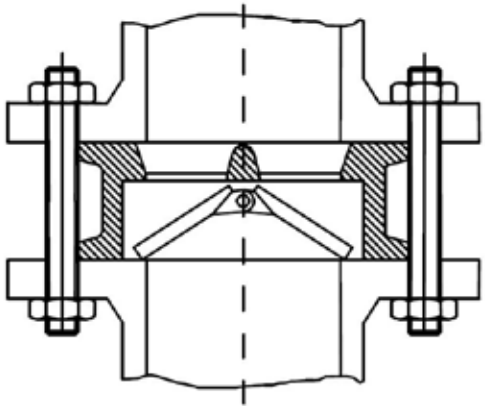

FIG. 1

GENERAL PRECAUTIONS

Dual Plate check valves can be mounted on horizontal or vertical pipes with upward or downward fluid flow, and a number of specific precautions must be taken for each case.

HORIZONTAL FLOW OR TILTED PIPES

In these cases, valves must be mounted with the disc rotation axis in a vertical position, such that the discs seat on the support rings and have a balanced swing taking the same stress (see Fig.2).

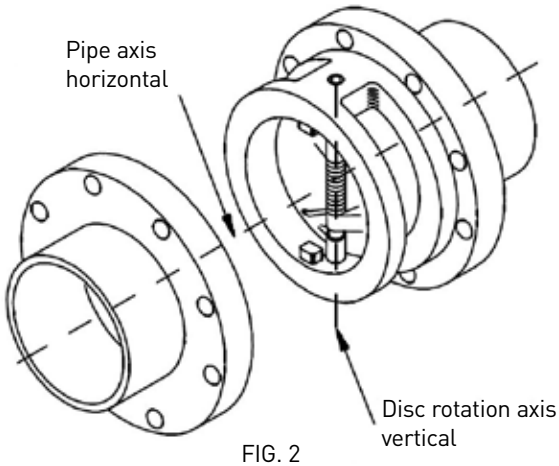

FIG. 2

PIPES WITH UPWARD VERTICAL FLOW

There is no definite position for the disc axis in this case, any direction being acceptable, selecting the most adequate direction depending on the pipe layout.

For this valve arrangement, the seat takes the disc weight, and an additional pressure drop takes place. In these cases and for diameters above 6", mounting low torque springs for counteracting the disc weight effect is recommended

The technical data and performance may be modified without prior notice depending on the technical advances.

INSTALLATION AND OPERATION INSTRUCTIONS

PIPES WITH DOWNWARD VERTICAL FLOW

Regarding the disc axis, the above stated applies.

For this valve arrangement, the disc weight is in the opening direction, and this must be known in advance to be able to mount high torque springs for valve diameters greater than 6".

MOUNTING PRECAUTIONS AS A FUNCTION OF THE VALVE ARRANGEMENT

For proper valve operation, fluid flow inside the valve at open valve position must be as uniform as possible to prevent valve discs from opening and closing at an angle close to fully opened valve, so producing an early wear of thrust washers and lateral faces of disc hinges.

Thus, taking into account the following points is important:

1) For valves with elastic seat, never weld next to the valve.

2) Never install the valve when flow is intermittent (pulsations).

3) If the valve is to be installed at a conical diffuser outlet, it must be adequately designed to avoid turbulence at the valve inlet. If it should be possible, off center diffusers with guiding vanes should be placed at diffuser outlet.

4) If the valve is to be installed at an elbow outlet, the same precautions as per the paragraph above shall be taken.

5) When mounted on pump discharge side, valves must be installed as far as possible from diffusers and elbows, in a stable flow area, at a minimum distance of five times the valve nominal diameter.

FOLLOW OPERATING INSTRUCTIONS!

For a correct function and to avoid premature wearings, it must be avoided to install this kind of valves in areas where the flow could be turbulent. In order to assure that the valve is working under stable flow conditions, it must be installed after a minimum straight pipe length of 5 times the DN of the valve from the pump of other elements which could provoke turbulences, such as cones, bends...

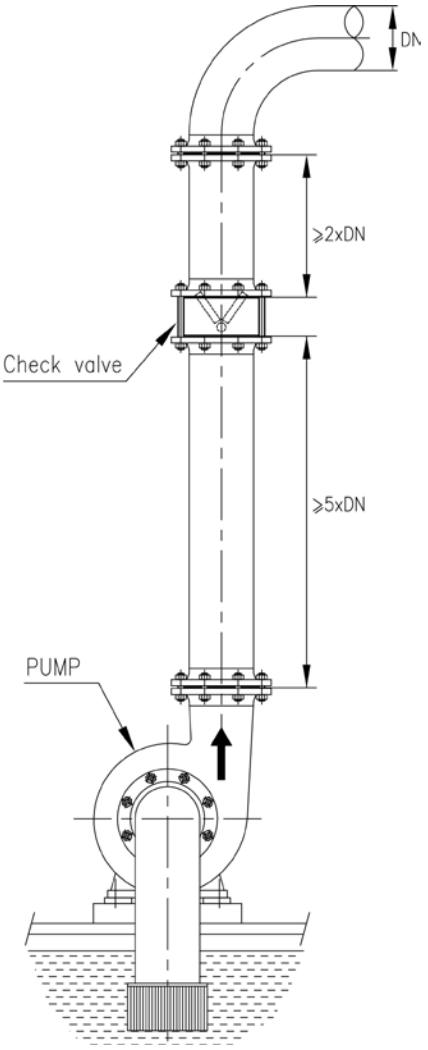

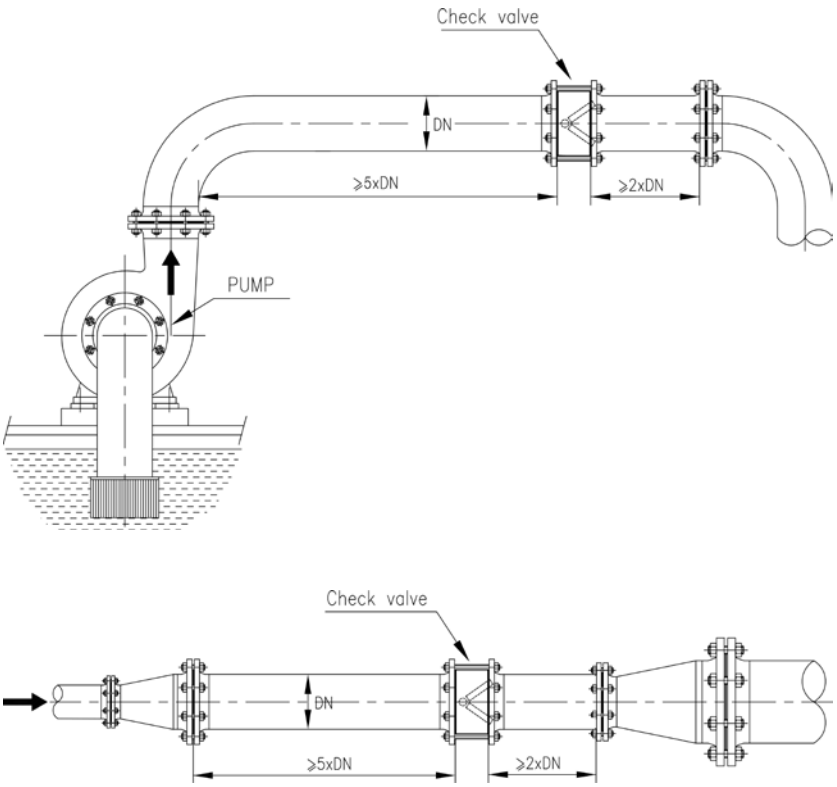

The technical data and performance may be modified without prior notice depending on the technical advances.

REFERENCE LIST

Project	Country	Capacity	Year
AMAALA SWRO SWRO Desalination	KSA	143,000	2025*
JORF LASFAR WAVE 2 EAST SWRO SWRO Desalination	MOROCCO	70.000	2024
JORF LASFAR WAVE WEST SWRO SWRO Desalination	MOROCCO	180,000	2024
SAFI SWRO	MOROCCO	70.000	2023
SHARM EL-SHEIKH SWRO	EGYPT	30.000	2023
RAS LAFFAN SWRO	QATAR	165.000	2022
JAFFNA SWRO	SRI LANKA	41.000	2022
NEMMELI SWRO	INDIA	150.000	2022
JUBAIL 3B SWRO	KSA	400.000	2022
KPRC SWRO	IRAN	89.664	2022
SHUQAIQ-1 SWRO	KSA	600.000	2022
AL KHOBAR 2 SWRO	KSA	600.000	2021
JUBAIL 2 SWRO	KSA	400.000	2021
ARISH SWRO	EGYPT	100.000	2020
ZARAT SWRO	TUNISIA	50.000	2020
SHUQAIQ-3 SWRO	KSA	450.000	2020
ZHOU SHAN SWRO	CHINA	20.000	2020
TALARA SWRO	PERU	86.400	2020
NUWEIBA SWRO	EGYPT	15.000	2020
NEW MANSOURA	EGYPT	40.000	2020
AL KHOBAR SWRO	KSA	210.000	2019
UMM AL HOUL II SWRO	QATAR	284.000	2019
SALALAH IWP SWRO	OMAN	113.500	2019
PORT SAID SWRO	EGYPT	150.000	2019
BANDAR ABBAS SWRO Ph.2	IRAN	80.000	2019
ALPHA SWRO EXP.	UAE	10.000	2019
DUBA SWRO	KSA	125.000	2019
KAEC SWRO	KSA	30.000	2018
MARINA EAST SWRO	SINGAPORE	136.500	2018
AL HOCEIMA SWRO	MOROCCO	20.000	2018
EL ALAMEIN SWRO	EGYPT	150.000	2018
SHOAIBAH 3 EXPANSION II	KSA	150.000	2018
JAVA SWRO	INDONESIA	10.000	2017
AL SAAD BWRO	KSA		2017
BANDAR ABBAS SWRO	IRAN	20.000	2017
EL GALALAH SWRO	EGYPT	150.000	2017
AL KHAFJI SWRO	KSA	60.000	2017
JANUBIO REFURBISHMENT SWRO	SPAIN	18.000	2017
ISLA DE SAL & SAO VICENTE SWRO	CABO VERDE	2 X 5000	2017
SARDEGNA SWRO	ITALY	20.000	2017
TLEMCEN	ALGERIA	200.000	2016
DJERBA SWRO	TUNISIA	50.000	2016
SUR SWRO (additional)	OMAN	83.500	2016
TUAS 3 SWRO	SINGAPORE	130.000	2016
CANGZHOU SWRO	CHINA	30.000	2016
AL YOSR 2 SWRO	EGYPT	40.000	2016
QURAYYAT SWRO	OMAN	200.000	2016
BARKA SWRO	OMAN	280.000	2016
ENSENADA SWRO	MEXICO	21.600	2016
MARRASI SWRO	EGYPT	10.000	2016
2nd Changi NEWater (WRP)	SINGAPORE	228.000	2016
FACILITY D SWRO	QATAR	284.000	2016
RAS ABU FONTAS 3 SWRO	QATAR	164.000	2015
AL YOSR SWRO	EGYPT	40.000	2015
MIRFA IWPP-SWRO	UAE	136.380	2015
AGAMOS SWRO	CHILE	19.200	2015
MARSA MATROUH SWRO	EGYPT	24.000	2015









The technical data and performance may be modified without prior notice depending on the technical advances.

REFERENCE LIST

Project	Country	Capacity	Year
LANZAROTE-4 SWRO Expansion	SPAIN	20.000	2015
AL GHUBRAH IWP - SWRO	OMAN	190.932	2014
ASHDOD SWRO	ISRAEL	320.000	2014
FUJAIRAH I Expansion SWRO	UAE	136.000	2014
Pacific Rubiales Puerto Galan BWRO	COLOMBIA	79.500	2014
JUBAIL SWRO-4	KSA	100.000	2014
NUNGUA SWRO	GHANA	60.000	2014
BARKA 1 IWPP expansion	OMAN	45.460	2013
TENES SWRO	ALGERIA	200.000	2013
CANDELARIA SWRO	CHILE	29.800	2012
QINGDAO SWRO	CHINA	100.000	2012
Valle de Copiapó SWRO	CHILE	54.000	2012
Oropesa SWRO	SPAIN	41.000	2011
Alicante II SWRO	SPAIN	64.000	2010
Honaine SWRO	ALGERIA	200.000	2010
Cap Djinet SWRO	ALGERIA	100.000	2010
Almeria-Almanzora	SPAIN	200.000	2009
BARCELONA SWRO	SPAIN	200.000	2008
Hadera SWRO	ISRAEL	330.000	2008
Mostaganem SWRO	ALGERIA	200.000	2008
Fouka SWRO	ALGERIA	120.000	2007
Melilla SWRO	SPAIN	200.000	2007
Chennai SWRO	INDIA	100.000	2007
"Campo de Valdelentisco SWRO "	SPAIN	140.000	2006
Alicante I SWRO	SPAIN	100.000	2006
Ashkelon SWRO	ISRAEL	330.000	2005
Arica SWRO	CHILE	18.000	2005
Andratx SWRO	SPAIN	14.000	2005
Los Cabos SWRO	MEXICO	20.000	2005
YANBU SWRO	KSA	50.400	2004
Antofagasta SWRO	CHILE	52.000	2004
Perth I SWRO	AUSTRALIA	200.000	2004
Dhekelia SWRO	CYPRUS	24.000	2006
Fujairah SWRO	UAE	284.000	2003
Ceuta SWRO	SPAIN	200.000	2002
Las Palmas SWRO	SPAIN	20.000	2000
Carboneras SWRO	SPAIN	120.000	2000

*Plant under construction.









The technical data and performance may be modified without prior notice depending on the technical advances.



BELGICAST is the undisputed Number One for water transport and water flow control. BELGICAST has the best solutions available in the fields of water and energy management as well as for industrial and communal applications. We have numerous products for comprehensive solutions for the whole water cycle – from hydrants, butterfly valves and knife gate valves through to needle valves. Our experience, innovative technology, global expertise and individual consultation processes form the basis for developing long-term solutions for the efficient treatment of the vitally important resource "water".

BELGICAST
Polígono Industrial La Cruz,
Parcela P-4-1, 48196 Lezama
Bizkaia, SPAIN
PHONE +34 94 488 91 00
FAX +34 94 488 91 25
E-MAIL belgicast@belgicast.es
INTERNET www.belgicast.eu

PBR_CHV260730_DUALPLATE_EN

Note: Information and specifications may be changed without notification at any time.
Copyright: No copying without express written permission of BELGICAST.
BELGICAST is a Registered Trademark.

BELGICAST