CANTY

PROCESS TECHNOLOGY

FUSEVIEW™ TRI-CLAMP® SIGHT GLASS WITH FILTER

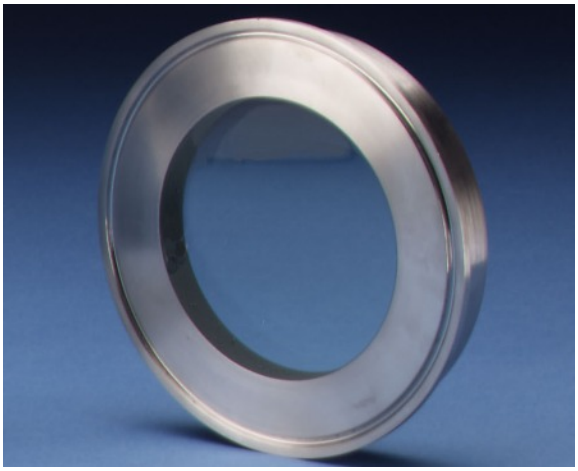

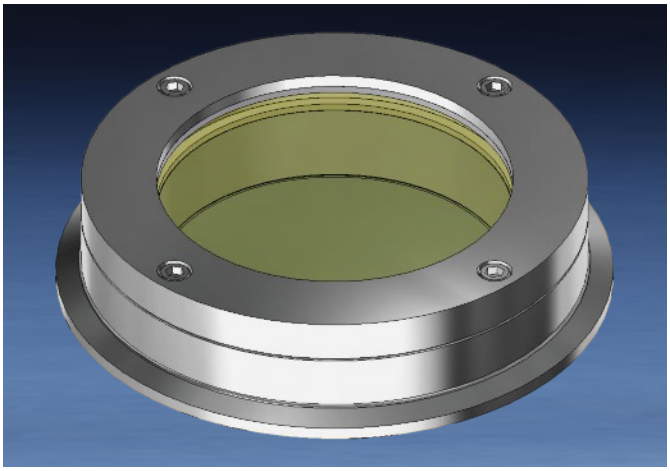

THE CANTY ADVANTAGE

J.M. Canty Fuseview™ sight glasses have been engineered to meet all your hygienic process and safety needs. Fuseview™ Tri-clamps® are a fused sight glass providing a one-piece, flush mount construction. All standard Tri-clamp® Fuseviews™ were designed and tested to ensure the safest product available. Canty can provide certification of material and testing if required, typical of ASME code requirements for process vessels. Canty Fuseview™ sight glasses are designed in strict compliance to the ASME BPE standard.

UNMATCHED SAFETY, RELIABLE

All Canty sight glasses feature the Fuseview™ window. Our unique fused glass windows far exceed all conventional tempered glass windows in safety and performance. By fusing glass to metal, a high pressure, high safety, hermetic seal is formed. The fused glass Technology ensures safety with every Fuseview™. What's more, our windows can easily be removed for cleaning. Canty windows do not have to be discarded, as do traditional tempered glass windows. Canty fused glass windows can be re-used again and again.

OPTIONS

- Lighting - Flex bundle light available to eliminate the need for a second nozzle.
- Jet spray ring - integral or two piece spray ring available for cleaning glass, see TA11500-1020.
- NA-Connect mounting options available, see datasheets TA9805-1 and TA10646-1.

FEATURES

- Integral filter eliminates undesirable wavelengths of light that may interfere with photo-sensitive processes and result in adverse process reactions
- Stainless Steel, Alloy C, Hastelloy®C276 or equal, or Hastelloy® C-22® or equal one piece construction
- Pressure rating to 150 PSI [10 bar], actual rating is dictated by clamp and ferrule selection
- Standard temperatures to 450°F [232°C]
- One piece sanitary construction
- Connects to standard Tri-clamp® connection
- Special sizes available per drawing request
- Many, many more

ADVANTAGES OF THE FUSEVIEW™

- Extremely high strength due to radial compression on the hermetically sealed glass
- Very high impact strength and thermal shock resistance due to prestressing
- Operates under positive or negative pressure
- Certification on material and pressure rating is available, typical of ASME code requirements.

CANTY FUSEVIEW™ VS. OTHERS

- No loss of glass temper over time
- Scratches do not affect safety or life
- Unlike tempered glass, a Fuseview™ will not blow out if the surface is damaged
- No extra gaskets, shims, packing, or retaining rings to worry about

CANTY
JM Canty Inc | Buffalo, NY USA | Ph: (716) 625 4227 | Fax: (716) 625 4228
JM Canty Intl Ltd | Dublin, Ireland | Ph: + 353 (01) 882 9621 | Fax: +353 (01) 882 9622
www.jmcanty.com

Document P/N: TA7653-5 Rev 1

All registered trademarks are the property of their respective owners.

FUSEVIEW™ TRI-CLAMP® WITH FILTER SPECIFICATIONS

SIZE	F	G	H	TEMP RATING
2” / 50mm	1.18” [30mm]	2.52” [64mm]	.68” [17.3mm]	450°F [232°C]
2.5”	1.50” [38.1mm]	3.05” [77.5mm]	.68” [17.3mm]	450°F [232°C]
3” / 65mm	2.00” [50.8mm]	3.58” [90.9mm]	.68” [17.3mm]	450°F [232°C]
3.5” / 80mm	2.50” [63.5mm]	4.17” [106mm]	.68” [17.3mm]	450°F [232°C]
4” / 100mm	3.00” [76.2mm]	4.69” [119.1mm]	.68” [17.3mm]	450°F [232°C]
6”	4.00” [101.6mm]	6.57” [166.9mm	.68” [17.3mm]	450°F [232°C]
8”	5.70” [144.8mm]	8.57” [217.7mm]	.68” [17.3mm]	450°F [232°C]

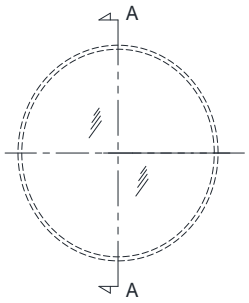

* Filter not shown

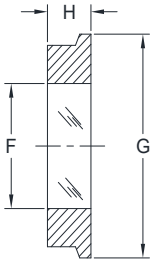

SECTION A-A

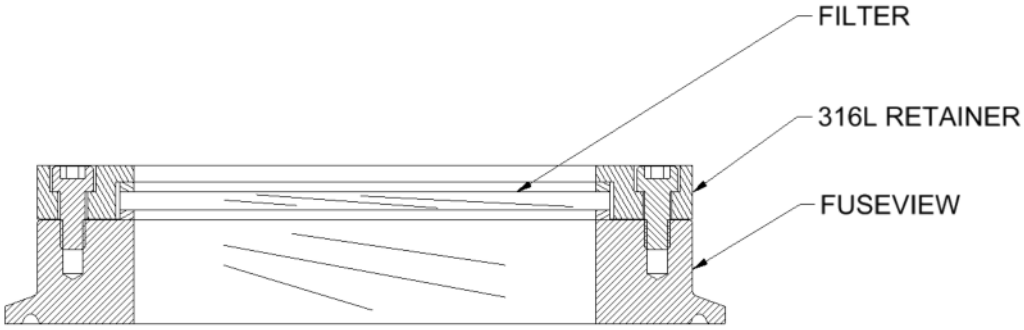

Ordering Information

HOW TO ORDER: Select the appropriate options and build a part number as shown:

EXAMPLE: **S4A_ _1_0A_**

SIZE:
9 = 2” / 50mm
A = 2.5”
B = 3” / 65mm
F = 3.5” / 80mm
C = 4” / 100mm
D = 6”
E = 8”

MATERIAL: (wetted)
B = 316L Stainless Steel*
C = Alloy C
D = Hastelloy® C276 or equal
E = Hastelloy® C-22® or equal

FINISH: (wetted) (non-wetted = 32 µin[.81 µm] Ra)
0 = 20 µin[.51 µm] Ra (standard)(BPE-SF1)
C = 15 µin[.38 µm] Ra
L = 20 µin[.51 µm] Ra Electropolished (BPE-SF5)
M = 15 µin[.38 µm] Ra Electropolished (BPE-SF4)

FILTER:
F = GG420nm wavelength filter
L = OG590nm wavelength filter
0 = No filter
**Other filters available*

* Canty reserves the right to upgrade to Hastelloy® C-family of alloys or equal at their own cost.

All registered trademarks are the property of their respective owners.

CANTY
JM Canty Inc | Buffalo, NY USA | Ph: (716) 625 4227 | Fax: (716) 625 4228
JM Canty Intl Ltd | Dublin, Ireland | Ph: + 353 (01) 882 9621 | Fax: +353 (01) 882 9622
www.jmcanty.com