CANTY

PROCESS TECHNOLOGY

ASEPTIC NA-CONNECT® ONE PIECE FUSEVIEW™ SIGHT GLASS

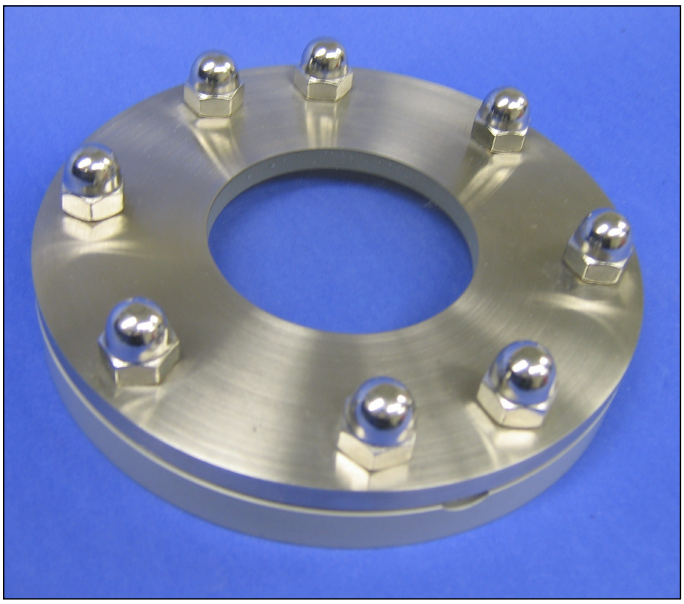

THE CANTY ADVANTAGE

CANTY Fuseview™ sight glasses have been engineered to meet all your process and safety needs. NA-Connect® Fuseviews™ are a fused sight glass providing one-piece construction with no additional gaskets or torquing required. All standard NA-Connect® Fuseviews™ were designed and tested to ensure the safest product available. CANTY can provide certification of material and testing if required, typical of ASME code requirements for process vessels.

FUSEVIEW™ vs. TEMPERED GLASS

CANTY Fuseviews™ are fused from superior nickel alloys. Using Boro Plus™ glass fusing technology, the pre-stressed metal ring prevents formation of the glass stresses usually associated with tempered borosilicate sight glasses.

Used in conjunction with any standard NA-Connect® mount pad, our sight glass greatly increases safety over the traditional tempered glass or plastic windows used in aseptic and sanitary applications.

FEATURES

- One piece compact design
- Flush outer surface allows for complete runoff from an external washdown
- Eliminates air pockets and trapped material
- Designed for full torquing. No over-torquing to gaskets or window ring can occur
- Unit stays in place during CIP and SIP
- Available in 316L S.S., Alloy C, Hastelloy® C276 or equal, Hastelloy® C-22® or equal.
- NA-Connect® Fitting rated to 101 PSI [7 bar] @ 392°F [200°C]. Fuseview™ rated to 150 PSI [10 bar] @ 400°F [204°C]. Higher ratings available on request.
- Custom sizes available upon request
- Fuseview™ provides maximum available view
- Operates under positive or negative pressure
- Certification on material and pressure rating is available, typical of ASME code requirements

CANTY FUSEVIEW™ vs. METALGLASS

- Largest view in the Industry.
- Fuseviews™ are made with excellent corrosion resistant high nickel Alloy C, Hastelloy® C276 or equal, Hastelloy® C-22® or equal, not duplex stainless steels.
- Boro Plus™ fused glass is superior to other glass with ideal optical and fusing properties. It readily fuses to steel making a one piece hermitically sealed window capable of high pressures and temperatures.
- Ideal properties of metal and glass provides true fusion of glass to metal. This provides a stronger safer fuse that will not crack during installation or operation like borosilicate and duplex stainless steels.
- Superior impact, thermal shock, and pressure resistance from the use of optimum materials and the proper fusing process.

OPTIONS

- Lighting - Flex bundle light available to eliminate the need for a second nozzle. View and illuminate through one port!

CANTY

Buffalo, NY USA
Ph: (716) 625 4227

Dublin, Ireland
Ph: + 353 (01) 882 9621

Phuket, Thailand
Ph: + 66 (83) 968 9548

www.jmcanty.com

Document P/N: TA10646-1 Rev 6

All registered trademarks are the property of their respective owners.

NA-CONNECT® ONE PIECE FUSEVIEW™ SPECIFICATIONS

BILL OF MATERIALS

ITEM	DESCRIPTION
1	MOUNT PAD (CUSTOMER SUPPLIES)
2	GASKET (CUSTOMER SUPPLIES)
3	CANTY NA-CONNECT® FUSEVIEW™
4	STUDS (CUSTOMER SUPPLIES)
5	NUTS (CUSTOMER SUPPLIES)

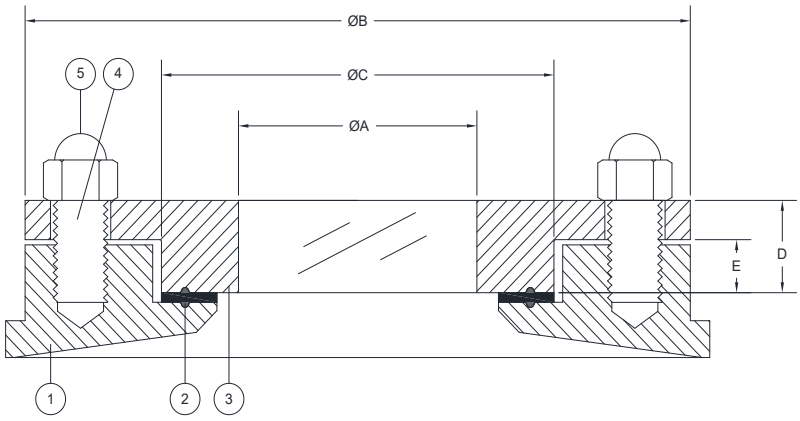

NA CONNECT® SIZE	VIEW ØA	ØB	ØC	D	E
1.5” / 40mm	1.13” [29mm]	3.35” [85mm]	1.98” [50.5mm]	.53” [135mm]	.28” [7mm]
2” / 50mm	1.50” [38mm]	3.94” [100mm]	2.52” [64mm]	.58” [15mm]	.31” [8mm]
2.5”	1.50” [38mm]	4.41” [112mm]	3.05” [77.5mm]	.72” [18mm]	.31” [8mm]
3” / 65mm	2.13” [54mm]	5.16” [131mm]	3.58” [91mm]	.72” [18mm]	.31” [8mm]
80 mm	2.50” [63.5mm]	5.51” [140mm]	4.17” [106mm]	.72” [18mm]	.31” [8mm]
4” /100mm	3.00” [76mm]	6.69” [170mm]	4.69” [119mm]	.72”[18mm]	.31” [8mm]

Ordering Information

HOW TO ORDER: Select the appropriate symbols and build a part number as shown:

EXAMPLE: **SEA_ _1_0A0**

SIZE:
A = 1.5” / 40mm
B = 2” / 50mm
C = 2.5”
D = 3” 65mm
4 = 80mm
E = 4” / 100mm

MATERIAL (wetted):
B = 316L Stainless Steel*
C = Alloy C (4” / 100mm only)
D = Hastelloy® C276 or equal
E = Hastelloy® C-22® or equal

FINISH:(wetted)(non-wetted=32 µin[.81 µm] Ra)
0 = 20 µin[.51 µm] Ra (standard)(BPE-SF1)
C = 15 µin[.38 µm] Ra
L = 20 µin[.51 µm] Ra Electropolished (BPE-SF5)
M = 15 µin[.38 µm] Ra Electropolished (BPE-SF4)

*Canty reserves the right to upgrade to Hastelloy® C-family of alloys or equal at their own cost.

CANTY
Buffalo, NY USA
Ph: (716) 625 4227
Dublin, Ireland
Ph: + 353 (01) 882 9621
Phuket, Thailand
Ph: + 66 (83) 968 9548
www.jmcanty.com
Document P/N: TA10646-1 Rev 6
All registered trademarks are the property of their respective owners.