chemvalve-schmid.com

ChemValve®
Valve Technology



ChemFlyer | CST

PTFE Lined Butterfly Valve

Product Brochure

Company Overview

ChemValve-Schmid AG develops and manufactures high quality valves which are sold and distributed through a carefully developed network of long-standing partners in more than 50 countries all over the world.

We have been developing Check Valves and PTFE Lined Butterfly Valves in close cooperation with the most important European PTFE manufacturers since the 1980s. As a result, we have over 30 years of expertise in valve production. Our private and therefore independent company has shown consistent and healthy growth since then.

„Innovative – proficient – reliable", that's our motto. Thanks to years of investment in state-of-the-art production technologies and highly qualified employees, we offer unprecedented product and service quality in this sector. We creatively develop on-time solutions that are focused on our customers' needs. Thanks to our process reliability, which covers the entire value chain through to warehousing and has evolved over many years, standard products are delivered within only a few days in line with customer-controlled assembly requirements. Existing products are continuously improved and new products are developed based on customer requirements.



Zertifiziertes Managementsystem SQS ISO 9001

CE 1250

Features 4
Components 6
Specifications 7
Dimensions | Wafer | DIN 8
Dimensions | Lug | DIN 9
Dimensions | Wafer | ANSI 10
Dimensions | Lug | ANSI 11
Dimensions | CST-K Duroplast 12
Dimensions | Top Flange 13
Flow Rate | Kv-Values 14
Pressure/Temperature Diagram 15
Torques 16
Actuation | Handlever 17
Actuation | Manual Gearbox | Standard 18
Actuation | Manual Gearbox | Premium 19
Actuation | Pneumatic Actuator 20
Order Code 21

ChemFlyer | CST

Features





The **ChemFlyer | CST** is the world leading, customisable PTFE lined butterfly valve, manufactured in Switzerland to the highest standards to provide secure handling of aggressive media.

Unparalleled Sealing & Security

- Safer handling of corrosive media thanks to the unique sealing system
- The adaptive pressure package guarantees supreme tightness and constant contact pressure throughout the operational lifetime
- Especially designed for operation with highly aggressive substances such as chlorine, hydrogen fluoride & sulphuric acid
- Technologically advanced sealing system, constantly perfected over decades of product development

Modular & Distinctive

- The modular design is highly configurable and each valve is individually traceable through its unique serial number
- Adaptable to a multitude of requirements and applications thanks to its configurable, modular design
- Individual serial numbers allow complete traceability of all pressure-bearing parts

Low Abrasion Design

- Spherical design reduces friction and increases operational lifespan
- Following the natural movement of the valve disc, the curved liner reduces wear and tear
- The rounded, polished edges of the disc minimise torque and allow the use of smaller, more economical actuators
- The one-piece valve disc, precisely machined to fractions of a millimetre, protects the shaft from warping
- Precisely manufactued backups provide maximum sealing over an increased operational lifespan

Additional features

+ Optional modified PTFE significantly improves durability when dealing with permeable media and high temperatures
+ Guaranteed compatibility with all established actuator systems through a range of shaft mounting options
+ Actuation devices, including hand levers, manual gearboxes and motorised actuators, are available
+ 2-week standard delivery, driven by intelligent logistics and dedicated PTFE valve production facilities

ChemFlyer | CST

Features

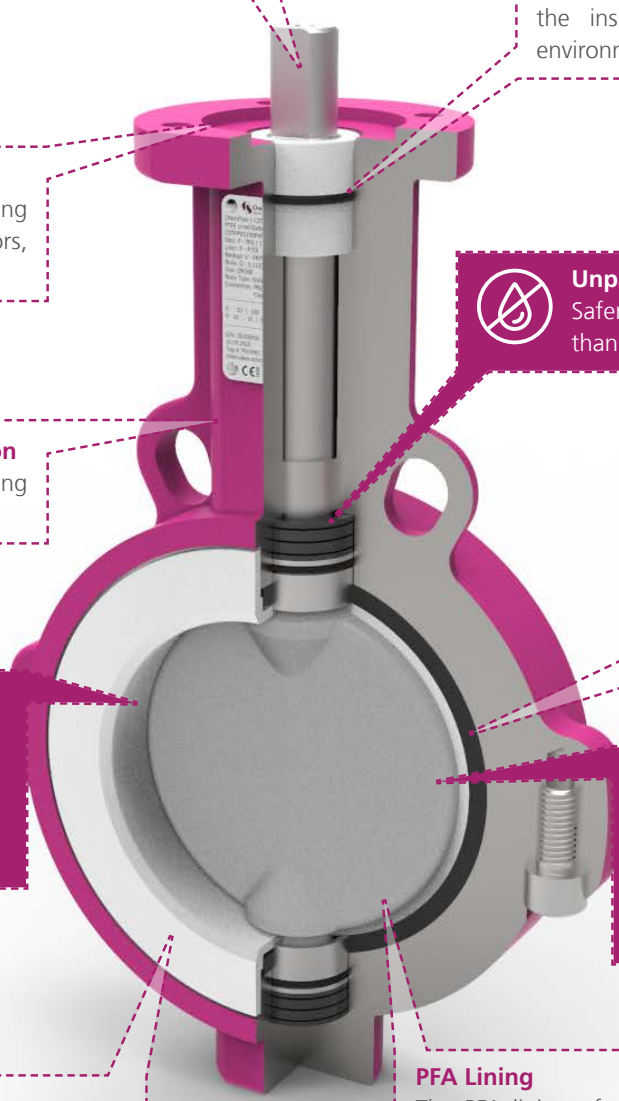

Stem Connections
Available in Double-D, Square Parallel or Square Diagonal

Atmospheric Seal
An oversized, press-fitted POM Bushing with Viton O-rings protects the inside of the valve against environmental conditions

Standardised Head Flange
According to ISO 5211, allowing direct mounting of actuators, gearboxes and hand-levers

Unparalleled Sealing & Security
Safer handling of corrosive media thanks to the unique sealing system

External Corrosion Protection
120µm epoxy coating according to ISO 12944-5 C2M

Compression-Moulded Backups
The precisely manufactured elastomer backups ensure uniform pressure is applied around the whole circumference of the liner

Low Abrasion Design
Spherical design reduces abrasion and increases operational lifespan

Modular & Distinctive
The modular design is highly configurable and each valve is individually traceable through its unique serial number

Choice of Liner
The liner is available in the highest quality virgin PTFE, modified PTFE & UHMPE and a minimum of 3mm thick

PFA Lining
The PFA lining of the disc is of the highest quality

ChemFlyer | CST

Components

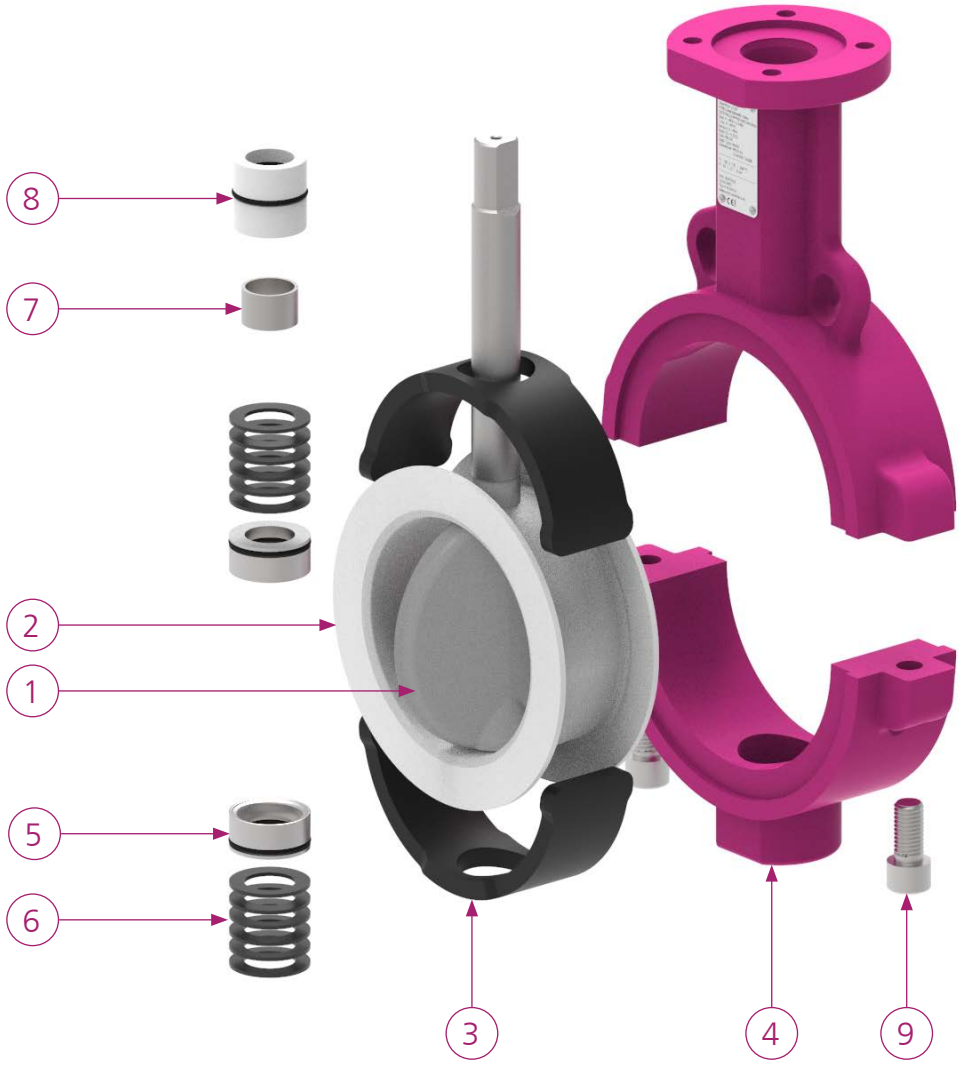

Item #	Description	Materials
1	Disc	PFA Conductive PFA Stainless Steel, 1.4404 Duplex, 1.4462, 1.4469 Titanium Grade 2, 3.7035 Hastelloy C, 2.4602, 2.4819
2	Liner	PTFE Modified PTFE Modified Conductive PTFE UHMPE
3	Backup	VMQ EPDM FKM

Item #	Description	Materials
4	Body	Ductile Iron, 5.3103 Stainless Steel, 1.4404 Carbon Steel, S355J2 Duroplast, VE-CF
5	Pusher	1.4301 with FKM O-Ring
6	Belleville Springs	Steel Nickel Plated Steel
7	Shaft Bushing	PTFE Stainless Steel
8	Top Bushing	POM with FKM O-ring
9	Body Bolts	12.9 A4

ChemFlyer | CST

Specifications

Nominal Diameter	• DN 25–1200 • 1"–48"
Flange Connection	• EN 1092–1, PN 10–16 • ASME B16.5/B16.47, Class 150 • JIS 10K
Top Flange	• ISO 5211
Maximum Working Pressure	• DN 25–450: 10 bar • DN 500–600: 6 bar • DN 700–1200: 3 bar • DN25–150: Up to 16 bar possible
Operating Temperature	• -60 °C to 200 °C
Face-to-Face Length	• EN 558, Series 20 • ASME B16.10, Column 3/4
Conformity	• PED 2014/68/EU • ATEX 2014/34/EU • Food (EC) No 1935/2004, FDA • TA-Luft, ISO 15848-1
Pressure and Seat Tightness Test: EN 12266-1	• Leakage Rate A







ChemFlyer | CST

Dimensions | Wafer | DIN

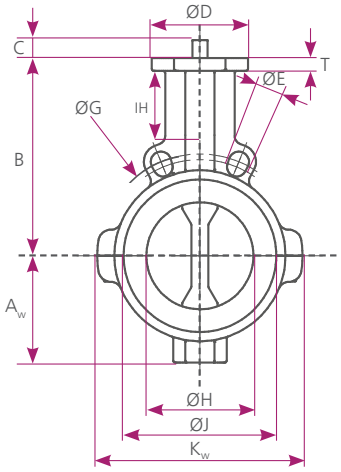

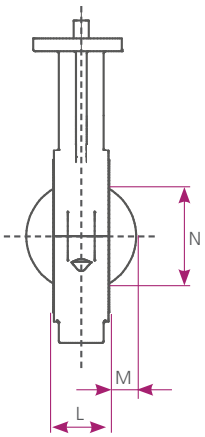

DN [mm]	25	40	50	65	80	100	125	150	200	250	300	350
DN [Inch]	1"	1½"	2"	2½"	3"	4"	5"	6"	8"	10"	12"	14"
A_W	53	53	60	70	84	100	110	130	158	194	225	255
B	94	94	130	146	165	185	202	217	245	270	308	330
C_{P2}	19	19	19	19	19	25	25	30	-	-	-	-
$C^1_{D4/P4}$	17	17	17	17	17	17	17	22	26	30	30	28
ØD	65	65	90	90	90	90	90	90	125	125	125	150
T	10	10	12	12	12	12	12	12	16	16	16	16
$ØE_{PN10}$	4x14	4x18	4x18	4x18 8x18	8x18	8x18	8x18	8x22	8x22	12x22	12x22	16x22
$ØE_{PN16}$										12x26	12x26	16x26
$ØG_{PN10}$	85	110	125	145	160	180	210	240	295	350	400	460
$ØG_{PN16}$										355	410	470
ØH	37	46.4	50	62	75	100	125	141	195	244	295	335.6
ØJ	60	76	85	106	122	143	166	193	251	301	349	414
K_W	138	138	124	148	165	192	223	253	312	374	424	586
L	41[2]	33	43	46	46	52	56	56	60	68	78	92**
M	3	7	6	11	17	27	38	47	71	92	112	125
N	22	34	31	47	63	90	118	137	190	240	290	328
IH	31	31	46	50	62	68	70	70	67	56	59	57
$kg_{1.4404}$	2.2	1.5	3.3	4.7	5	5.9	9.8	12.7	20.8	31.3	53.3	112.6
$kg_{5.3103}$	2.6	2.7	3.2	4	4.5	6.2	8.2	10.5	16.7	26.5	37.5	91

DN [mm]	400	450	500	600	700	750	800	900	1000	1050	1200
DN [Inch]	16"	18"	20"	24"	28"	30"	32"	36"	40"	42"	48"
A_L	290	314	342	401	577	603	637	684	732	757	905
B	365	400	435	510	582	608	637	684	732	757	905
C_{P2}	-	-	-	-	-	-	-	-	-	-	-
$C^1_{D4/P4}$	28	37	37	47	47	56	56	56	56	56	56
ØD	150	175	175	210	210	300	300	300	300	300	300
T	18	20	20	20	35	35	35	35	35	35	35
$ØE_{PN10}$	16x26	20x26	20x26	20x30	24x30	-	24x33	28x33	28x36	-	32x39
$ØE_{PN16}$	16x30	20x30	20x32	-	-	-	-	-	-	-	-
$ØG_{PN10}$	515	565	620	725	840	-	950	1050	1160	-	1380
$ØG_{PN16}$	525	585	650	-	-	-	-	-	-	-	-
ØH	389.9	437.9	491.4	579.9	676.1	726	776.8	877.8	965.8	1016	1 169.3
ØJ	460	515	570	672	787	851	894	1 016	1 101	1 170	1 305
K_L	650	700	745	870	1 000	1 050	1 130	1 245	1 410	1 410	1 530
L	102	114	127	154	154[2]	154[2]	154[2]	154[2]	154[2]	154[2]	154[2]
M	146	164	184	215	264	289	314	364	408	433	508
N	378	424	477	561	665	717	768	868	957	1 010	1 160
IH	57	65	72	89	85	90	91	82	64	68	133
$kg_{1.4404}$	89.8	114.8	158.2	273.7	-	-	-	-	-	-	-
$kg_{5.3103}$	115	156	178	285	478.5	545.3	653.6	787.8	961	1 034	1 328.2

[1]D4: DN25–150 only
[2]Not according to ISO 5752 or EN 558
[3]According to EN558, Series 25
Please note: For DN 25–40 & 350–1200, a lug-style body, drilled through, is used

ChemFlyer | CST

Dimensions | Lug | DIN

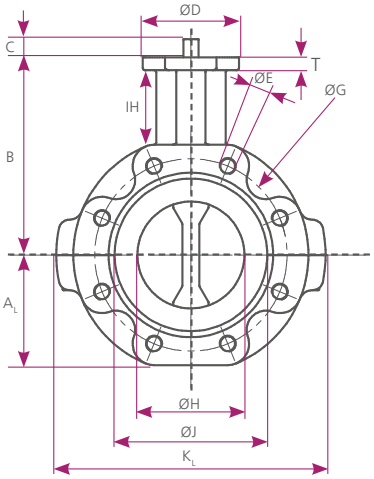

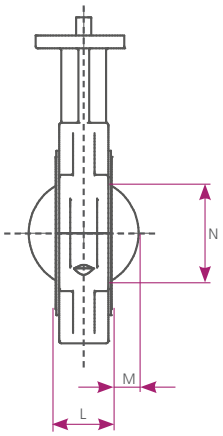

DN [mm]	25	40	50	65	80	100	125	150	200	250	300	350
DN [Inch]	1"	1½"	2"	2½"	3"	4"	5"	6"	8"	10"	12"	14"
A_L	53	53	60	81	88	103	117	128	160	194	228	255
B	94	94	130	146	165	185	202	217	245	270	308	330
C_{P2}	19	19	19	19	19	25	25	30	-	-	-	-
$C^1_{D4/P4}$	17	17	17	17	17	17	17	22	26	30	30	28
ØD	65	65	90	90	90	90	90	90	125	125	125	150
T	10	10	12	12	12	12	12	12	16	16	16	16
$ØE_{PN10}$	4x M12	4x M16	4x M16	4xM16 8xM16	8x M16	8x M16	8x M16	8x M20	8x M20	12x M20	12x M20	16x M20
$ØE_{PN16}$									12x M20	12x M24	12x M24	16x M24
$ØG_{PN10}$	85	110	125	145	160	180	210	240	295	350	400	460
$ØG_{PN16}$										355	410	470
ØH	37	46.4	50	62	75	100.1	124.8	141.5	195.2	244.3	295.3	335.6
ØJ	60	76	85	106	122	143	166	193	251	301	349	414
K_L	138	138	156	203	218	252	286	310	376	450	520	586
L	41[2]	33	43	46	46	52	56	56	60	68	78	92[3]
M	3	7	6	11	17	27	38	47	71	92	112	125
N	22	34	31	47	63	90	118	137	190	240	290	328
IH	31	31	59	51	65	69	72	77	69	60	63	57
$kg_{1.4404}$	2.5	3.2	5.5	7.5	8.3	13.8	18.3	24.5	35.8	49.9	74.3	113.3
$kg_{5.3103}$	2.6	2.7	4	6.2	7.5	10	13.5	15.8	25.2	34	61	91

DN [mm]	400	450	500	600	700	750	800	900	1000	1050	1200
DN [Inch]	16"	18"	20"	24"	28"	30"	32"	36"	40"	42"	48"
A_L	290	314	342	401	577	603	637	684	732	757	905
B	365	400	435	510	582	608	637	684	732	757	905
C_{P2}	-	-	-	-	-	-	-	-	-	-	-
$C^1_{D4/P4}$	28	37	37	47	47	56	56	56	56	56	56
ØD	150	175	175	210	210	300	300	300	300	300	300
T	18	20	20	20	35	35	35	35	35	35	35
$ØE_{PN10}$	16x M24	20x M24	20x M24	20x M27	24x M27	-	24x M30	28x M30	28x M33	-	32x M36
$ØE_{PN16}$	16x M17	20x M27	20x M30	-	-	-	-	-	-	-	-
$ØG_{PN10}$	515	565	620	725	840	-	950	1 050	1 160	-	1 380
$ØG_{PN16}$	525	585	650	-	-	-	-	-	-	-	-
ØH	389.9	437.9	491.4	579.9	676.1	726	776.8	877.8	965.8	1016	1 169.3
ØJ	460	515	570	672	787	851	894	1 016	1 101	1 170	1 305
K_L	650	700	745	870	1 000	1 050	1 130	1 245	1 410	1 410	1 530
L	102	114	127	154	154[2]	154[2]	154[2]	154[2]	154[2]	154[2]	154[2]
M	146	164	184	215	264	289	314	364	408	433	508
N	378	424	477	561	665	717	768	868	957	1 010	1 160
IH	57	65	72	89	85	90	91	82	64	68	133
$kg_{1.4404}$	132	180	219.6	-	-	-	-	-	-	-	-
$kg_{5.3103}$	115	156	178	285	478.5	545.3	653.6	787.8	961	1 034	1 328.2

[1]D4: DN25–150 only
[2]Not according to ISO 5752 or EN 558
[3]According to EN558, Series 25

ChemFlyer | CST

Dimensions | Wafer | ANSI

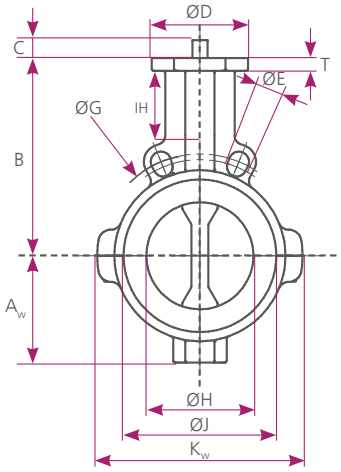

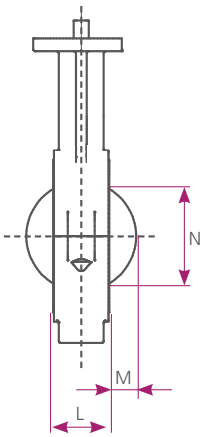

DN [mm]	25	40	50	65	80	100	125	150	200	250	300	350
DN [Inch]	1"	1½"	2"	2½"	3"	4"	5"	6"	8"	10"	12"	14"
A_W	53	53	60	70	84	100	110	130	158	194	225	255
B	94	94	130	146	165	185	202	217	245	270	308	330
C_{P2}	19	19	19	19	19	25	25	30	-	-	-	-
$C^1_{D4/P4}$	17	17	17	17	17	17	17	22	26	30	30	28
ØD	65	65	90	90	90	90	90	90	125	125	125	150
T	10	10	12	12	12	12	12	12	16	16	16	16
ØE	4x16	4x16	4x19	4x19	4x19	8x19	8x22	8x22	8x22	12x26	12x26	12x29
ØG	79.4	98.4	120.7	139.7	152.4	190.5	215.9	241.3	298.4	362	431.8	476.3
ØH	37	46.4	50	62	75	100	125	141	195	244	295	335.6
ØJ	60	76	85	106	122	143	166	193	251	301	349	414
K_W	138	138	124	148	165	192	223	253	312	374	424	586
L	41[2]	33	43	46	46	52	56	56	60	68	78	92
M	3	7	6	11	17	27	38	47	71	92	112	125
N	22	34	31	47	63	90	118	137	190	240	290	328
IH	31	31	46	50	62	68	70	70	67	56	59	57
$kg_{1.4404}$	2.2	1.5	3.3	4.7	5	5.9	9.8	12.7	20.8	31.3	53.3	112.6
$kg_{5.3103}$	2.6	2.7	3.2	4	4.5	6.2	8.2	10.5	16.7	26.5	37.5	91

DN [mm]	400	450	500	600	700	750	800	900	1000	1050	1200
DN [Inch]	16"	18"	20"	24"	28"	30"	32"	36"	40"	42"	48"
A_L	290	314	342	401	577	603	637	684	732	757	905
B	365	400	435	510	582	608	637	684	732	757	905
C_{P2}	-	-	-	-	-	-	-	-	-	-	-
$C^1_{D4/P4}$	28	37	37	47	47	56	56	56	56	56	56
ØD	150	175	175	210	210	300	300	300	300	300	300
T	18	20	20	20	35	35	35	35	35	35	35
ØE	16x29	16x32	20x32	20x35	28x35	28x35	28x42	32x42	36x42	36x42	44x42
ØG	539.8	577.9	635	749.3	863.6	914.4	977.9	1 085.8	1 200.15	1 257.3	1 422.4
ØH	389.9	437.9	491.4	579.9	676.1	726	776.8	877.8	965.8	1016	1 169.3
ØJ	460	515	570	672	787	851	894	1 016	1 101	1 170	1 345
K_L	650	700	745	870	1 000	1 050	1 130	1 245	1 410	1 410	1 620
L	102	114	127	154	154[2]	154[2]	154[2]	154[2]	154[2]	154[2]	154[2]
M	146	164	184	215	264	289	314	364	408	433	508
N	378	424	477	561	665	717	768	868	957	1 010	1 160
IH	57	65	72	89	85	90	91	82	64	68	133
$kg_{1.4404}$	89.8	114.8	158.2	273.7	-	-	-	-	-	-	-
$kg_{5.3103}$	115	156	178	285	478.5	545.3	653.6	787.8	961	1 034	1 328.2

[1]D4: DN25–150 only
[2]Not according to ASME B16.10, Class 150
Please note: For DN 25–40 & 350–1200, a lug-style body, drilled through, is used

ChemFlyer | CST

Dimensions | Lug | ANSI

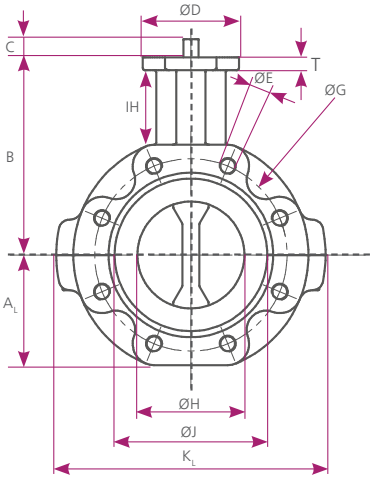

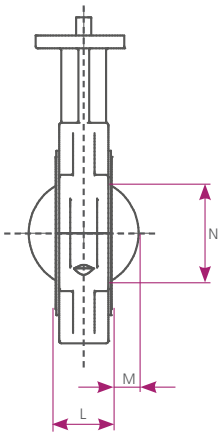

DN [mm]	25	40	50	65	80	100	125	150	200	250	300	350
DN [Inch]	1"	1½"	2"	2½"	3"	4"	5"	6"	8"	10"	12"	14"
A_L	53	53	60	81	88	103	117	128	160	194	228	255
B	94	94	130	146	165	185	202	217	245	270	308	330
C_{P2}	19	19	19	19	19	25	25	30	-	-	-	-
$C^1_{D4/P4}$	17	17	17	17	17	17	17	22	26	30	30	28
ØD	65	65	90	90	90	90	90	90	125	125	125	150
T	10	10	12	12	12	12	12	12	16	16	16	16
ØE	4x½"	4x½"	4x⅝"	4x⅝"	4x⅝"	4x⅝"	8x¾"	8x¾"	8x¾"	12x⅞"	12x⅞"	12x1"
UNC TPI	13	13	11	11	11	11	10	10	10	9	9	8
ØG	79.4	98.4	120.7	139.7	152.4	190.5	215.9	241.3	298.4	362	431.8	476.3
ØH	37	46.4	50	62	75	100.1	124.8	141.5	195.2	244.3	295.3	335.6
ØJ	60	76	85	106	122	143	166	193	251	301	349	414
K_L	138	138	156	203	218	252	286	310	376	450	520	586
L	41[2]	33	43	46	46	52	56	56	60	68	78	92**
M	3	7	6	11	17	27	38	47	71	92	112	125
N	22	34	31	47	63	90	118	137	190	240	290	328
IH	31	31	59	51	65	69	72	77	69	60	63	57
$kg_{1.4404}$	2.5	3.2	5.5	7.5	8.3	13.8	18.3	24.5	35.8	49.9	74.3	113.3
$kg_{5.3103}$	2.6	2.7	4	6.2	7.5	10	13.5	15.8	25.2	34	61	91

DN [mm]	400	450	500	600	700	750	800	900	1000	1050	1200
DN [Inch]	16"	18"	20"	24"	28"	30"	32"	36"	40"	42"	48"
A_L	290	314	342	401	577	603	637	684	732	757	905
B	365	400	435	510	582	608	637	684	732	757	905
C_{P2}	-	-	-	-	-	-	-	-	-	-	-
$C^1_{D4/P4}$	28	37	37	47	47	56	56	56	56	56	56
ØD	150	175	175	210	210	300	300	300	300	300	300
T	18	20	20	20	35	35	35	35	35	35	35
ØE	16x 1"	16x 1⅛"	20x 1⅛"	20x 1¼"	28x 1¼"	28x 1¼"	28x 1½"	32x 1½"	36x 1½"	36x 1½"	44x 1½"
UNC TPI	8	8	8	8	7	7	6	6	6	6	6
ØG	539.8	577.9	635	749.3	863.6	914.4	977.9	1 085.8	1 200.15	1 257.3	1 422.4
ØH	389.9	437.9	491.4	579.9	676.1	726	776.8	877.8	965.8	1016	1 169.3
ØJ	460	515	570	672	787	851	894	1 016	1 101	1 170	1 345
K_L	650	700	745	870	1 000	1 050	1 130	1 245	1 410	1 410	1 620
L	102	114	127	154	154[2]	154[2]	154[2]	154[2]	154[2]	154[2]	154[2]
M	146	164	184	215	264	289	314	364	408	433	508
N	378	424	477	561	665	717	768	868	957	1 010	1 160
IH	57	65	72	89	85	90	91	82	64	68	133
$kg_{1.4404}$	132	180	219.6	-	-	-	-	-	-	-	-
$kg_{5.3103}$	115	156	178	285	478.5	545.3	653.6	787.8	961	1 034	1 328.2

[1]D4: DN25–150 only
[2]Not according to ASME B16.10, Class 150

ChemFlyer | CST

Dimensions | CST-K Duroplast

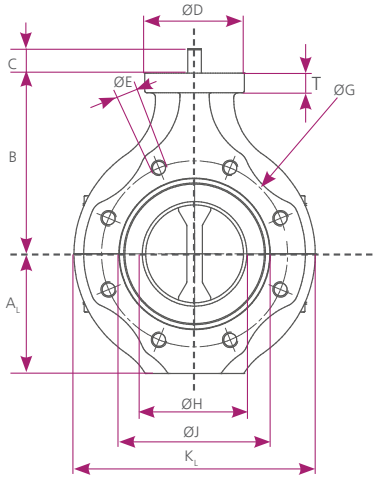

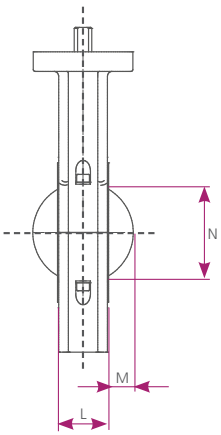

DN [mm]	50	65	80	100	150	200	250	300
DN [inch]	2"	2½"	3"	4"	6"	8"	10"	12"
A_L	80	85	108	123.5	151	182	225	262
B	130	146	165	185	217	245	270	308
C_{P2}	19	19	19	25	30	-	-	-
$C^*_{D4/P4}$	17	17	17	17	22	26	30	30
ØD	102	102	102	102	102	152	152	152
T	20	20	20	20	20	25	25	25
$ØE_{DIN}$	4x M16	-	8x M16	8x M16	8x M20	8x M20	12x M20	12x M20
$ØE_{ANSI}$	4x19	4x19	4x19	4x19	8x22	8x22	12x26	12x26
$ØG_{DIN}$	125	145	160	180	240	295	350	400
$ØG_{ANSI}$	120.7	139.7	152.4	190.5	241.3	298.4	362	431.8
ØH	60	60	80	100	150	199.5	249	300
ØJ	85	106	122	143	193	251	301	349
K_L	181	200	216	247	302	364	450	524
L	43	46	46	52	56	60	68	78
M	11	10	20	27	50	72	94	114
N	49	46	71	91	145	196	246	296
kg_L	1.8	2.1	2.5	3.6	6.8	10.8	19.4	31

*D4: DN50–150 only

ChemFlyer | CST

Dimensions | Top Flange

DN 25-150

P2

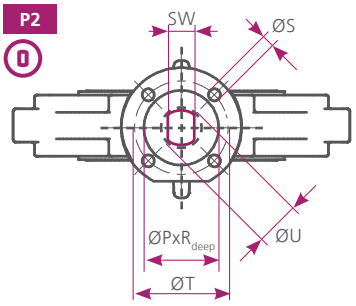

D4

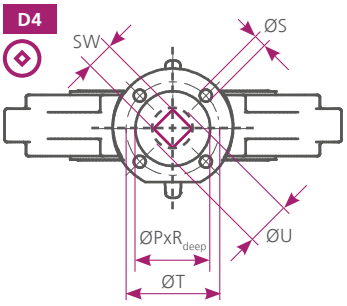

DN 25-1200

P4

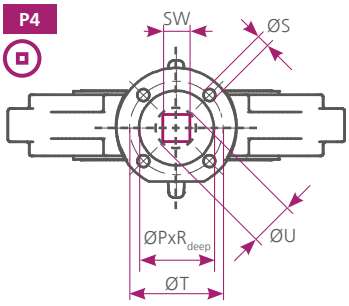

DN [mm]	25	40	50	65	80	100	125	150	200	250	300	350	400	450	500	600	700	750	800	900	1000	1050	1200
DN [inch]	1"	1½"	2"	2½"	3"	4"	5"	6"	8"	10"	12"	14"	16"	18"	20"	24"	28"	30"	32"	36"	40"	42"	48"
$SW_{P2/D4}$	9	9	11	11	11	14	14	17	-	-	-	-	-	-	-	-	-	-	-	-	-	-	-
SW_{P4}	9	9	11	11	11	14	14	17	19	22	22	27	27	36	36	46	46	55	55	55	55	55	55
ØU	13	13	14	14	14	18	18	22	24	28	28	35	35	47	47	58	60	72	72	72	72	72	72
ISO	F05	F05	F07	F07	F07	F07	F07	F07	F10	F10	F10	F12	F12	F14	F14	F16	F16	F16	F25	F25	F25	F25	F25
ØT	50	50	70	70	70	70	70	70	102	102	102	125	125	140	140	165	165	165	254	254	254	254	254
ØS	4x ø7	4x ø7	4x ø9	4x ø9	4x ø9	4x ø9	4x ø9	4x ø9	4x ø11	4x ø11	4x ø11	4x ø13	4x ø13	4x ø17	4x ø17	4x ø21	4x ø21	4x ø21	8x ø17	8x ø17	8x ø17	8x ø17	8x ø17
ØP x R_{DEEP}	36 x 3.5	36 x 3.5	56 x 3.5	56 x 3.5	56 x 3.5	56 x 3.5	56 x 3.5	56 x 3.5	71 x 3.5	71 x 3.5	71 x 3.5	87 x 3.5	87 x 3.5	102 x 4.5	102 x 4.5	132 x 5.5	132 x 5.5	132 x 5.5	202 x 5.5	202 x 5.5	202 x 5.5	202 x 5.5	202 X 5.5

ChemFlyer | CST

Flow Rate | Kv-Values

Flow Rate/Kv-Value [m³/h]											
Opening Angle	DN [mm]										
	25	40	50	65	80	100	125	150	200	250	300
20°	0.001	1.4	2.1	4.4	8.1	17	28	39	85	119	181
30°	1.0	5.1	6.7	14	22	48	74	97	202	274	404
40°	3.0	11	14	27	41	91	145	194	415	527	771
50°	6.0	22	28	49	75	160	244	316	658	949	1 329
60°	10	38	46	80	123	259	392	503	1 036	1 484	2 179
70°	16	56	69	118	179	375	563	717	1 463	2 038	3 083
80°	21	75	92	158	240	502	754	958	1 956	2 727	4 124
90°	28	102	124	211	318	660	985	1 244	2 523	3 514	5 315

Flow Rate/Kv-Value [m³/h]												
Opening Angle	DN [mm]											
	350	400	450	500	600	700	750	800	900	1000	1050	1200
20°	277	393	528	647	843	1 050	1 181	1 353	1 861	2 131	2 398	3 131
30°	602	856	1 148	1 434	1 861	2 347	2 675	3 064	4 394	4 827	5 431	7 092
40°	1 139	1 650	2 173	2 418	3 473	4 324	4 864	5 570	7 621	8 777	9 874	12 894
50°	2 034	2 893	3 414	3 980	5 706	7 104	7 991	9 207	11 817	13 792	15 516	20 262
60°	3 335	4 628	5 742	6 490	9 427	11 737	13 203	15 120	19 791	23 195	26 095	34 077
70°	4 718	6 711	8 535	10 268	14 140	17 606	19 804	22 282	30 783	34 480	38 790	50 655
80°	6 312	8 979	12 043	14 983	19 349	24 246	27 274	31 433	44 252	50 152	56 422	73 680
90°	8 134	11 571	15 519	19 308	24 807	30 887	34 744	39 789	55 653	62 690	70 528	92 100

ChemFlyer | CST

Pressure/Temperature Diagram

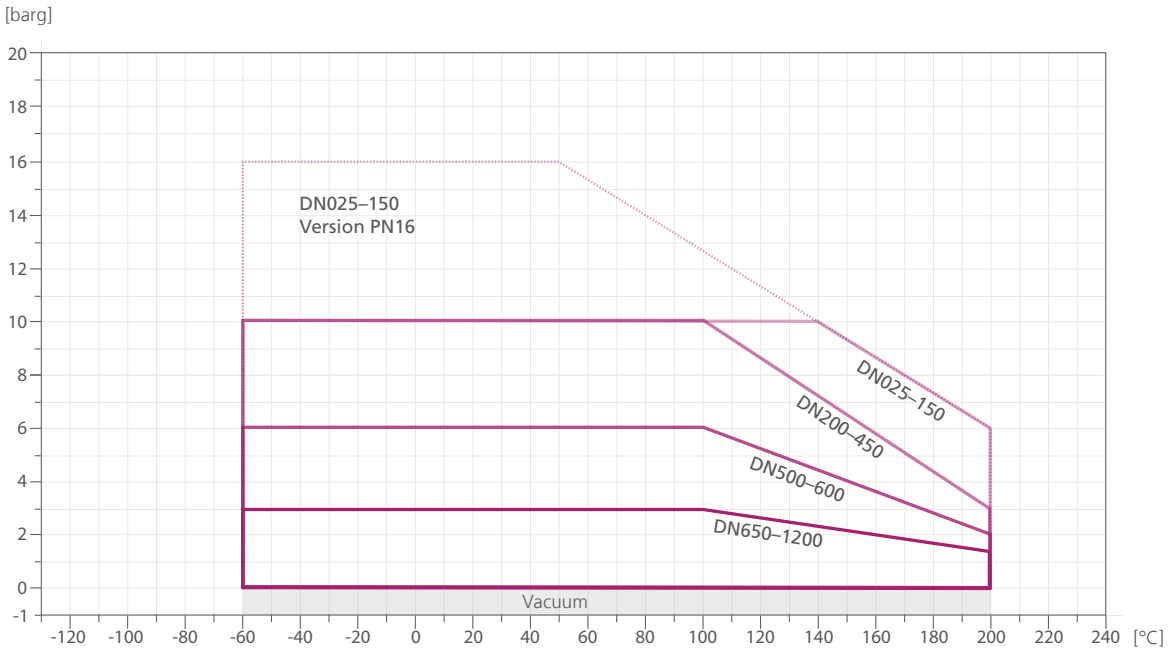

Disc	**P/Q** PFA	DN250–900	PFA **P/Q**
	C PFAc	DN250–900	PFAc **C**
	S/D Stainless Steel	1.4404/1.4469	Stainless Steel **S/D**
	J Stainless Steel Polished	1.4404/1.4462	Polished Stainless Steel **J**
	F Stainless Steel Polished	1.4462/1.4462	Polished Stainless Steel **T**
	G Stainless Steel E-polished	1.4404/1.4462	E-polished Stainless Steel **G**
	T Titanium	3.7035	Titanium **T**
	H Hastelloy	2.4602/2.4819	Hastelloy **H**
Liner	**P/B** PTFE/PTFEf		PTFE/PTFEc **P/B**
	T mPTFE		mPTFE **T**
	C/K mPTFEc/PTFEc		mPTFEc/PTFEc **C/K**
	U UHMPE	UHMPE **U**	
Backup	**S** VMQ (Silicone)		(Silicone) VMQ **S**
	V FKM (Viton)		(Viton) FKM **V**
	E EPDM	EPDM **E**	
	F FKM - Steam & FDA		Steam & FDA - FKM **F**
	L VMQ (Silicone) Low Temperature		Low Temperature (Silicone) VMQ **L**
Body	**G** Ductile Iron	5.3103 - EN-GJS-400-18-LT	Ductile Iron **G**
	S Stainless Steel	1.4404	Stainless Steel **S**
	M Stainless Steel Polished	1.4301	Polished Stainless Steel **M**
	E Stainless Steel E-polished	1.4404	E-polished Stainless Steel **E**
	N Stainless Steel	1.4301	Stainless Steel **N**
	C C-Steel	S355J2	C-Steel **C**
	K Duroplast	Duroplast **K**	

ChemFlyer | CST

Torques

DN [mm]	Breakaway Torque [Nm]
25	22
40	22
50	26
65	36
80	46
100	60
125	80
150	110
200	167
250	278
300	333
350	450
400	500
450	600
500	650
600	890
700	1 500
750	2 000
800	2 300
900	2 700
1000	3 400
1050	3 600
1200	4 800

Max. Allowable Torque for Stem Connection [Nm]						
DN [mm]	P2			D4*/P4		
	Steel 1.4469/1.4462	Titanium Grd.2 3.7035	Hastelloy C 2.4602/2.4819	Steel 1.4469/1.4462	Titanium Grd.2 3.7035	Hastelloy C 2.4602/2.4819
25	112	74	73	48	32	31
40	112	74	73	48	32	31
50	159	105	103	89	59	57
65	159	105	103	89	59	57
80	159	105	103	89	59	57
100	335	222	216	183	121	118
125	335	222	216	183	121	118
150	608	402	393	327	216	211
200	-	-	-	456	302	295
250	-	-	-	664	469	457
300	-	-	-	664	469	457
350	-	-	-	1 227	866	845
400	-	-	-	1 227	866	845
450	-	-	-	2 909	2 053	2 004
500	-	-	-	2 909	2 053	2 004
600	-	-	-	6 069	4 283	4 181
700	-	-	-	6 069	4 283	4 181
750	-	-	-	10 374	7 321	7 147
800	-	-	-	10 374	7 321	7 147
900	-	-	-	10 374	7 321	7 147
1000	-	-	-	10 374	7 321	7 147
1050	-	-	-	10 374	7 321	7 147
1200	-	-	-	10 374	7 321	7 147

*D4: DN25–150 only

Breakaway torques calculcated with 10% safety factor.
For dry and unlubricated service, multiply these values by 1.2 (Δp ≤ 0.5×PS) or 1.4 (Δp > 0.5×PS)

ChemFlyer | CST

Actuation | Handlever

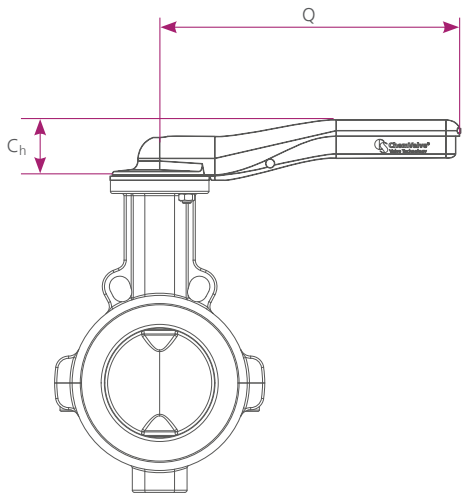

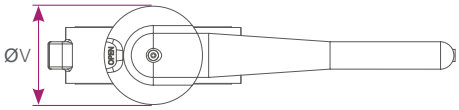

Handlever	
Part	**Material**
Grip	Stainless Steel
Ratchet Disc	Stainless Steel

DN [mm]	40	50	65	80	100	125	150	200	250	300
DN [inch]	1½"	2"	2½"	3"	4"	5"	6"	8"	10"	12"
C_h	46	55	55	55	55	55	55	55	55	55
Q	232.5	272.5	272.5	272.5	272.5	272.5	272.5	350	350	350
V	65	90	90	90	90	90	90	125	125	125
kg	1	1.5	1.5	1.5	1.5	1.5	1.5	2.7	2.7	2.7

ChemFlyer | CST

Actuation | Manual Gearbox | Standard

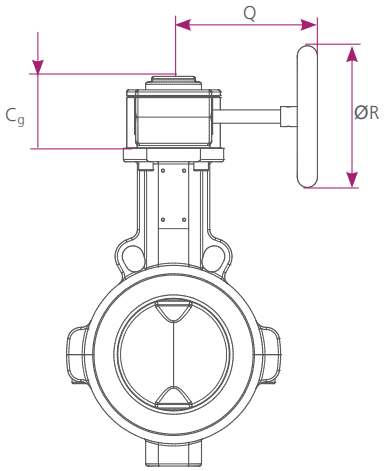

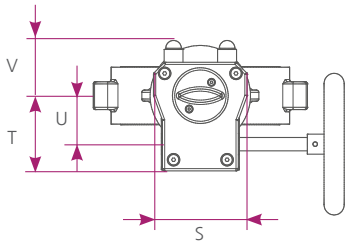

Configuration	
Valve Size	DN025–700
Protection Rating	IP67
Stem Connection	P4

Materials	
Gearcase and Cover	Cast Iron
Quadrant	Ductile Iron
Worm	Carbon Steel
Input Shaft	Carbon Steel
Seals	Nitrile Rubber
Fasteners	Zinc Plated Alloy Steel
Indicator	Stainless Steel
Handwheel | DN025–300	Cast Iron
Handwheel | DN350–700	Carbon Steel

DN [mm]	25	40	50	65	80	100	125	150	200	250	300	350	400	450	500	600	700
DN [inch]	1"	1½"	2"	2½"	3"	4"	5"	6"	8"	10"	12"	14"	16"	18"	20"	24"	28"
C_g	40	40	40	40	40	40	40	44	50	54	54	60	60	71	71	86	86
Q	91	91	9	91	91	91	91	139	139	156	156	212	212	255	255	255	355
ØR	100	100	100	100	100	100	100	200	200	200	200	300	300	400	400	400	600
S	66	66	66	66	66	66	66	80	92	107	107	115	115	135	135	156	156
T	52	52	52	52	52	52	52	62	63	82	82	84	84	103	103	115	115
U	34	34	34	34	34	34	34	41	41	55	55	55	55	69	69	81	81
V	30	30	30	30	30	30	30	38	38	49	49	48	48	60	60	77	77
kg	1.3	1.3	1.3	1.3	1.3	1.3	1.3	2	2.4	3.9	3.9	4.7	4.7	6.9	6.9	10	10

ChemFlyer | CST

Actuation | Manual Gearbox | Premium

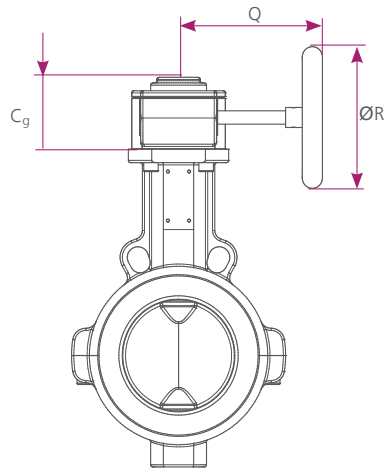

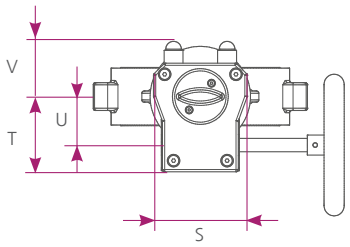

Configuration	
Valve Size	DN025–1200
Protection Rating	IP68
Stem Connection	P2/P4/D4

Materials	
Gearcase and Cover	Cast Iron
Quadrant	Ductile Iron
Worm	Carbon Steel
Input Shaft	Stainless Steel
Seals	Nitrile Rubber
Fasteners	Stainless Steel
Indicator	Powder-coated metal with O-ring
Handwheel | DN025–300	Cast Iron
Handwheel | DN350–1000	Carbon Steel

DN [mm]	25	40	50	65	80	100	125	150	200	250	300	350	400	450	500	600	700	750	800	900	1000	1050	1200
DN [inch]	1"	1½"	2"	2½"	3"	4"	5"	6"	8"	10"	12"	14"	16"	18"	20"	24"	28"	30"	32"	36"	40"	42"	48"
C_g	54.2	54.2	54.2	54.2	54.2	54.2	54.2	63	63	63	63	88	88	88	88	92.5	92.5	102	121	121	121	121	153
Q	115.5	115.5	115.5	115.5	115.5	115.5	115.5	175	175	186	186	297	297	297	297	385	385	426	468	468	468	468	468
ØR	100	100	100	100	100	100	100	100	125	200	200	400	400	400	400	600	600	700	600	600	600	600	600
S	80	80	80	80	80	80	80	102	102	102	102	135	135	135	135	200	200	220	285	285	285	285	293
T	66	66	66	66	66	66	66	79.5	79.5	79.5	79.5	105	105	105	105	126	126	148	151	151	151	151	195
U	42.5	42.5	42.5	42.5	42.5	42.5	42.5	52	52	52	52	71	71	71	71	86	86	104.5	53	53	53	53	140
V	58	58	58	58	58	58	58	48	48	48	48	69	69	69	69	100	100	110	142	142	142	142	142
kg	2.3	2.3	2.3	2.3	2.3	2.3	2.3	4.5	4.5	4.5	4.5	10	10	10	10	15.2	15.2	23.5	28.2	28.2	28.2	28.2	50.2

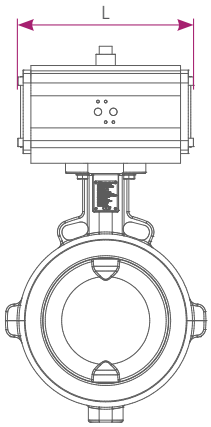

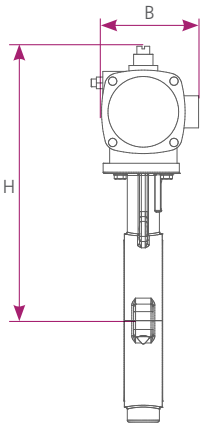

Double-acting pneumatic actuator*						
DN [mm]	DN [inch]	Code	L [mm]	B [mm]	H [mm]	W [kg]
40	1½"	ADA40	158	91	209	2.1
50	2"	ADA80	177	111	267	3
65	2½"	ADA80	177	111	283	3
80	3"	ADA80	177	111	302	3
100	4"	ADA80	177	111	322	3
125	5"	ADA130	196	122	349	3.8
150	6"	ADA200	225	136	382	5.6
200	8"	ADA300	273	153	427	8.5
250	10"	ADA500	304	173	469	11.2
300	12"	ADA500	304	173	507	11.2
350	14"	ADA850	372	192	551	16.9
400	16"	ADA850	372	192	586	16.9
450	18"	ADA850	372	192	621	16.9
500	20"	ADA1200	439	213	684	25.8
600	24"	ADA2100	510	277	823	49.7
700	28"	ADA2100	510	277	895	49.7
750	30"	ADA4000	630	415	1042	129.4
800	32"	ADA4000	630	415	1071	129.4
900	36"	ADA4000	630	415	1118	129.4
1000	40"	ADA4000	630	415	1166	129.4
1050	42"	ADA4000	630	415	1191	129.4

***Control Pressure 6.0 bar**

Single-acting pneumatic actuator*						
DN [mm]	DN [inch]	Code	L [mm]	B [mm]	H [mm]	W [kg]
40	1½"	ASR80S14A	217	111	231	3.7
50	2"	ASR130S14A	258	122	277	4.8
65	2½"	ASR130S14A	258	122	293	4.8
80	3"	ASR200S14A	299	136	330	7.3
100	4"	ASR200S14A	299	136	350	7.3
125	5"	ASR300S14A	349	153	384	10.8
150	6"	ASR500S14A	397	173	416	15.4
200	8"	ASR850S14A	473	192	466	22.2
250	10"	ASR1200S14A	560	213	519	34.3
300	12"	ASR1200S14A	560	213	557	34.3
350	14"	ASR1750S14A	601	243	610	46
400	16"	ASR1750S14A	601	243	645	46
450	18"	ASR2100S14A	702	277	713	68
500	20"	ASR2100S14A	702	277	748	68
600	24"	ASR2500S14A	738	356	893	99.9

***Control Pressure 6.0 bar**

ChemFlyer | CST

Order Code

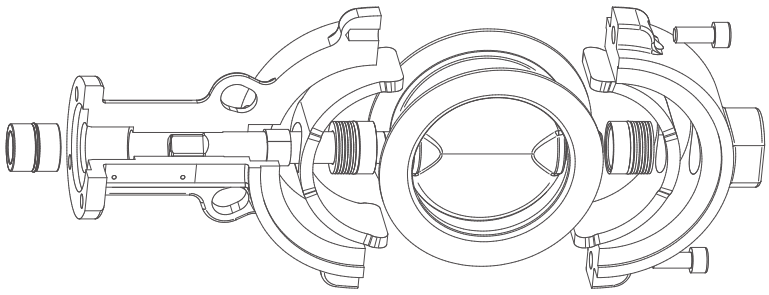

Order Code

Code Example: CSTPPSG100P4WD1

Disc		Liner		Backup		Body		Size	Stem End		Body Type		Flange		Actuation
Code	Material	Code	Material	Code	Material	Code	Material	[mm]	Code	Shape	Code	Type	Code	Pressure Class	Device
P	DN25-300: PFA/Duplex DN250+: PFA/Steel*	P	PTFE	S	VMQ (Silicone)	G	5.3103	025–1200	P4	Square Parallel	W	Wafer	D1	PN10	Bare Shaft
Q	DN350+: PFA/Duplex	T	mPTFE	V	FKM (Viton)	S	1.4404		P2	Double D	E	Lug	D2	PN16	Hand Lever
C	DN25-200: PFAc/Duplex DN250+: PFAc/Steel*	C	mPTFEc	E	EPDM	M	1.4404 Polished <0.8µm		D4	Square Diagonal			A1	ANSI150	Gearbox Standard
S	DN25-250: Duplex DN300+: 1.4404*	U	UHMPE	F	FKM Steam & FDA Compatible	E	1.4404 e-polished <0.4µm						J1	JIS 10K	Gearbox Premium
D	DN300+: Duplex	B	PTFEf	L	VMQ (Silicone) Low Temperature	N	1.4301								Single-acting Pneumatic Actuator
J	1.4404* polished <0.8µm	K	PTFEc			C	C-Steel								Double-acting Pneumatic Actuator
F	1.4462 polished <0.8µm					K	Duroplast								
G	1.4404* e-polished <0.4µm														
T	Titan Grad 2														
H	Hastelloy C														

*Stem from Duplex

ChemLine

Butterfly valve for advanced chemical applications
DN 25–1200
PN 10–16, Class 150, JIS 10K
EN 558, Series 20



PTFE Lined Butterfly Valve

ChemFlyer | CST

Patented TrueFloat® Technology
DN 15–200
PN 10–16, Class 150, JIS 10K
EN 558, Series 1
ASME B16.10, Table 1, Column 20/21



PFA Lined Ball Valve

ChemBall | CSB

Wetted parts made from PTFE
DN 15–150
PN 10–40, Class 150–300, JIS 10K
EN 558, Series 52



PTFE Disc Check Valve

ChemDisc | DTEF

PrimeLine

Energy saving design
DN 15–300
PN 10–40, Class 150–300, JIS 10K
EN 558, Series 52/14



Nozzle Check Valve

PrimeNozzle | CSL

DN 15–350
PN 6–40, Class 150–300, JIS 10K
EN 558, Series 49/52



Standard Disc Check Valve

PrimeDisc S | CSD-CVD

DN 15–100
PN 10–160, Class 150–900, JIS 10K
EN 558, Series 52



Xtreme Disc Check Valve

PrimeDisc X | DSF

DN 50–1000
PN 10–40, Class 150–300
EN 558, Series 97



Swing Check Valve

PrimeSwing | CSC

DN 50–1000
PN 10–40, Class 150–300, JIS 10K
EN 558, Series 16



Dual Plate Check Valve

Prime2Disc | DDC

DN 15–300
PN 6–40, Class 150–300
EN 558, Series 49/52



Strainer

PrimeFilter | CSF

ChemValve®
Valve Technology

ChemValve-Schmid AG
Duennernstrasse 540 | CH-4716 Welschenrohr | Switzerland
+41 32 639 50 10
sales@chemvalve-schmid.com
chemvalve-schmid.com

© ChemValve-Schmid AG 2026
CST Product Brochure V2.6.1_EN | 11/2026
Subject to change

Status 09.11.2026 Despite carfeully checking of all data given in the catalogue, we do not accept any liability for any incorrect or incomplete information. We reserve the right to make technical changes. Passing on and reproduction of this document, use of its contents and communication are prohibited unless expressly permitted. Representation may differ from the actual scope of delivery.