T-3025

Grooved
Static Balancing Valve



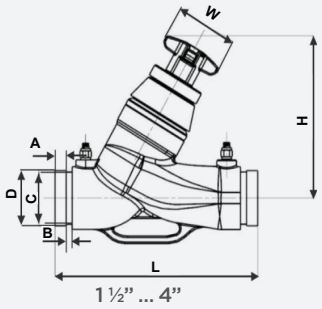

1 ½" ... 4"

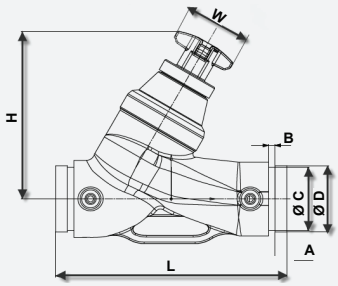

5"... 8"

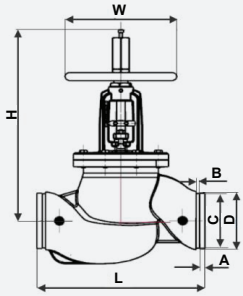

10" and 12"

Specifications & Standards

Sizes	: 1 ½", 2", 3", 4", 5", 6", 8", 10", 12"
Working Pressure	: 235 Psi
Connection Type	: Grooved x Grooved
Body	: Ductile Iron (EN GJS 400)
Stem	: Stainless Steel (AISI 420)
Seat Seal	: EPDM Perox
Handwheel	: 1 ½" ... 6" Ebonite / 8" Cast Iron / 10" and 12" Ductile Iron
Installation	: Horizontal or Vertical is Possible
Certificate	: CE

Dimensions

Size	Connection	Dimension				Diameter			Handwheel Turns	Weight
inch		inch								lbs
		L	H	A	B	C	D	W		
1 ½"	Grooved	7.88	6.93	0.62	0.31	1.77	1.89	3.38	6	12.78
2"		9.05	7.48	0.62	0.31	2.25	2.37	3.38	8	19.86
2 ½"		11.42	8.42	0.62	0.31	2.72	2.87	3.38	8	23.80
3"		12.20	8.86	0.62	0.31	3.35	3.50	3.38	8	59.00
4"		13.78	13.14	0.62	0.37	4.33	4.50	3.38	8	60.38
5"		15.75	15.27	0.62	0.37	5.39	5.57	3.38	10	116.26
6"		18.90	15.86	0.75	0.37	6.45	6.62	3.38	10	140.60
8"		23.62	32.48	0.75	0.44	8.44	8.62	12.40	12	354.84
10"		28.74	35.40	0.75	0.50	10.56	10.75	15.74	12	555.40
12"		33.46	37.20	0.75	0.50	12.53	12.75	15.74	14	683.20