Y-5065

Genel Özellikler / General Specifications

Ölçü / Dimensions: 2", 2 ½", 3", 4", 6", 8"
Anma Basıncı / Nominal Pressure: 350 PSI
Çalışma Sıcaklığı / Maximum Working Temperature: 0°C-80°C/32°F-176°F
Boya / Kaplama / Coating: Epoxy coated interior and exteriorby Electrostatic. Spray or coating upon request.

Ürün sayfası için okutun
Scan for product page



Standartlar / Standards

Sertifikalar / Certificate: UL, FM
Flanş Bağlantı Standardı / Flange Connection Standard: ASME/ANSI B16.1 Class 125 or ASME/ANSI B16.42 Class 150 or BS EN1092-2 PN16 or GB/T9113.1
Testler / Tests: FM 1120/1130, UL 262

Size	CV (Full Open)
2"	146
2,5"	197
3"	366
4"	611
6"	1812
8"	3612

Malzeme Özellikleri Material Specifications

No	Parça Adı / Part Name	Malzemeler / Materials
1	Gövde / Valve Body	Sfero Döküm / Ductile Iron
2	Civata / Bolt	Çelik1045 / Steel1045
3	Tapa / Plug	Çelik1045 / Steel1045
4	Tapa / Plug	Çelik1045 / Steel1045
5	Yaylı / Spring	Paslanmaz Çelik 304 / Stainless Steel 304
6	Menteşe pimi / Hinge Pin	Paslanmaz Çelik 304 - Sfero Döküm / Stainless Steel 304 -Ductile Iron
7	Klape / Clapper	Paslanmaz Çelik 304 / Stainless Steel 304
8	Sit / Seat	C95400
9	Sıkıştırma Halkası / Clamping Ring	Paslanmaz Çelik 304 / Stainless Steel 304
10	Kilit somunu / Locknut	Paslanmaz Çelik 304 / Stainless Steel 304
11	Kaplama Contası / Facing Seal	EPDM
12	Conta / Gasket	EPDM
13	Civata / Bolt	Paslanmaz Çelik 304 / Stainless Steel 304
14	Tapa / Plug	Çelik 1045 / Steel 1045

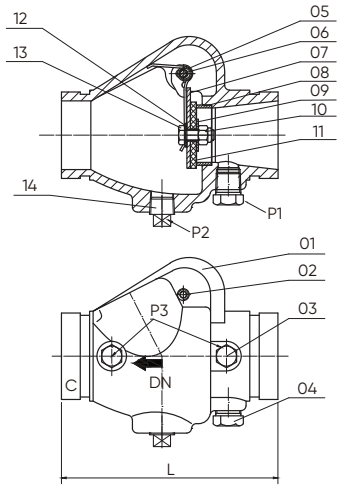

Ölçüler Dimension

Size	L	D1	D2	B	C	P1	P2						P3		
2"	169	57,15	60,3	7,95	15,88	Rc½-14	Rc½-14	Rc¾-14	Rc1-11	Rc1¼-11	Rc1½-11	Rc2-11	Rc¼-19	Rc⅜-19	Rc½-14
						½-14NPT	½-14NPT	¾-14NPT	1-11.5NPT	1¼-11.5NPT	1½-11.5NPT	2-11.5NPT	¼-18NPT	⅜-18NPT	½-14NTP
2½"	181	69,09	73	7,95	15,88	Rc½-14	Rc½-14	Rc¾-14	Rc1-11	Rc1¼-11	Rc1½-11	Rc2-11	Rc¼-19	Rc⅜-19	Rc½-14
		72,26	76,1	7,95	15,88	½-14NPT	½-14NPT	¾-14NPT	1-11.5NPT	1¼-11.5NPT	1½-11.5NPT	2-11.5NPT	¼-18NPT	⅜-18NPT	½-14NTP
3"	198	84,94	88,9	7,95	15,88	Rc½-14	Rc½-14	Rc¾-14	Rc1-11	Rc1¼-11	Rc1½-11	Rc2-11	Rc¼-19	Rc⅜-19	Rc½-14
						½-14NPT	½-14NPT	¾-14NPT	1-11.5NPT	1¼-11.5NPT	1½-11.5NPT	2-11.5NPT	¼-18NPT	⅜-18NPT	½-14NTP
4"	214	110,08	114,3	9,53	15,88	Rc½-14	Rc½-14	Rc¾-14	Rc1-11	Rc1¼-11	Rc1½-11	Rc2-11	Rc¼-19	Rc⅜-19	Rc½-14
						½-14NPT	½-14NPT	¾-14NPT	1-11.5NPT	1¼-11.5NPT	1½-11.5NPT	2-11.5NPT	¼-18NPT	⅜-18NPT	½-14NTP
6"	270	160,78	165,1	9,53	15,88	Rc½-14	Rc½-14	Rc¾-14	Rc1-11	Rc1¼-11	Rc1½-11	Rc2-11	Rc¼-19	Rc⅜-19	Rc½-14
		163,96	168,3			½-14NPT	½-14NPT	¾-14NPT	1-11.5NPT	1¼-11.5NPT	1½-11.5NPT	2-11.5NPT	¼-18NPT	⅜-18NPT	½-14NTP
8"	325	211,6	216,3	11,13	19,05	Rc½-14	Rc½-14	Rc¾-14	Rc1-11	Rc1¼-11	Rc1½-11	Rc2-11	Rc¼-19	Rc⅜-19	Rc½-14
		214,4	219,1			½-14NPT	½-14NPT	¾-14NPT	1-11.5NPT	1¼-11.5NPT	1½-11.5NPT	2-11.5NPT	¼-18NPT	⅜-18NPT	½-14NTP