KIESELMANN
FLUID PROCESS GROUP

Translation of the original

Operating Instructions

Bunging valves

Type 6268

for gas

spring loaded

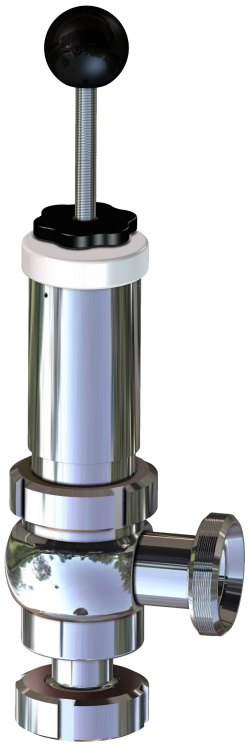

KIESELMANN GmbH

Paul-Kieselmann-Str. 4-10
D - 75438 Knittlingen

☎ +49(0) 7043 371-0 • 🖷 +49(0) 7043 371-125
www.kieselmann.de • info@kieselmann.de

Copyright: © KIESELMANN FLUID PROCESS GROUP

Table of contents

1 General informations 4
1.1 Informations for your safety 4
1.2 Marking of security instructions 4
1.3 General designated use 4
1.4 Personnel 4
1.5 Modifications, spare parts, accessories 5
1.6 General instructions 5
2 Safety instructions 6
2.1 Intended use 6
2.2 General notes 6
2.3 General safety instructions 6
3 Delivery, transport and storage 8
3.1 Delivery 8
3.2 Transport 8
3.3 Storage 8
4 Function and operation 9
4.1 Description of function 9
4.2 Manual operation 9
4.3 Pressure setting 9
5 Commissioning, service and maintenance 10
5.1 Commissioning 10
5.1.1 Installation instructions 10
5.1.2 General welding guidelines 10
5.1.3 Use in EX area 10
5.2 Service 10
5.3 Cleaning 11
6 Technical data 12
6.1 Bunging valve Type 6268 12
6.2 Identification 12
7 Disassembly and assembly 13
7.1 Disassembly 13
7.2 Assembly 14
8 Drawings and dimensions 15
8.1 Drawings 15
8.2 Dimensions 16
9 Wearing parts 17
9.1 Wearing parts list 17
10 Characteristic curves 18
10.1 Performance chart DN 15 / 20 18
10.2 Performance chart DN 25 / 32 21
10.3 Performance chart DN 40 / 50 24
11 Appendix 27
11.1 Declaration of incorporation 27

1 General informations

1.1 Informations for your safety

We are pleased that you have decided for a high-class KIESELMANN product. With correct application and adequate maintenance, our products provide long time and reliable operation.

Before installation and initiation, please carefully read this instruction manual and the security advices contained in it. This guarantees reliable and safe operation of this product and your plant respectively. Please note that an incorrect application of the process components may lead to great material damages and personal injury.

In case of damages caused by non observance of this instruction manual, incorrect initiation, handling or external interference, guarantee and warranty will lapse!

Our products are produced, mounted and tested with high diligence. However, if there is still a reason for complaint, we will naturally try to give you entire satisfaction within the scope of our warranty. We will be at your disposal also after expiration of the warranty. In addition, you will also find all necessary instructions and spare part data for maintenance in this instruction manual. If you don't want to carry out the maintenance by yourself, our KIESELMANN - service team will naturally be at your disposal.

1.2 Marking of security instructions

Hints are available in the chapter "safety instructions" or directly before the respective operation instruction. The hints are highlighted with a danger symbol and a signal word. Texts beside these symbols have to be read and adhered to by all means. Please continue with the text and with the handling at the valve only afterwards.

Symbol	Signal word	Meaning
	DANGER	Imminent danger which will result severe personal injury or death.
	WARNING	Imminent danger which may result severe personal injury or death.
	CAUTION	Dangerous situation which may cause slight personal injury or material damages.
	NOTICE	An harmful situation which may result in damages of the product itself or of adjacent vicinity.
	INFORMATION	Marks application hints and other information which is particularly useful.

1.3 General designated use

The fitting is designed exclusively for the purposes described below. Using the fitting for purposes other than those mentioned is considered contrary to its designated use. KIESELMANN cannot be held liable for any damage resulting from such use. The risk of such misuse lies entirely with the user. The prerequisite for the reliable and safe operation of the fitting is proper transportation and storage as well as competent installation and assembly. Operating the fitting within the limits of its designated use also involves observing the operating, inspection and maintenance instructions.

1.4 Personnel

Personnel entrusted with the operation and maintenance of the tank safety system must have the suitable qualification to carry out their tasks. They must be informed about possible dangers and must understand and observe the safety instructions given in the relevant manual. Only allow qualified personnel to make electrical connections.

1.5 Modifications, spare parts, accessories

Unauthorized modifications, additions or conversions which affect the safety of the fitting are not permitted. Safety devices must not be bypassed, removed or made inactive. Only use original spare parts and accessories recommended by the manufacturer.

1.6 General instructions

The user is obliged to operate the fitting only when it is in good working order. In addition to the instructions given in the operating manual, please observe the relevant accident prevention regulations, generally accepted safety regulations, regulations effective in the country of installation, working and safety instructions effective in the user's plant.

2 Safety instructions

2.1 Intended use

The bunging valve is primarily intended to be used to hold the pressure of gaseous media in tanks and containers consistently and to prevent over-pressures if the safety function is set.

2.2 General notes



NOTICE - observe the operating instructions

To avoid danger and damage, the fitting must be used in accordance with the safety instructions and technical data contained in the operating instructions.



NOTICE

All data are in line with the current state of development. Subject to change as a result of technical progress.

2.3 General safety instructions



⚠ WARNING

Risk of injury by outflowing medium

Dismantling the valve or valve assemblies from the plant can cause injuries.

- Medias flowing through the leakage drain outlet are to be drained off without splashing into a discharge arrangement.
- Carry the disassembling only if when the plant has been rendered pressure-less and free of liquid and gas.



⚠ WARNING

Risk of injury by outflowing medium

With pressure greater than the set pressure the gaseous or liquid media will radial escape into the atmosphere via outlet drillings.

- It is necessary to install protection and drainage devices.



⚠ WARNING

Functional impairment at low temperatures

Referring to the used sealing materials the vacuum valves are suitable for a minimum operating temperature at -5°C.

➢ Low operating or ambient temperatures may applicable a impairment the function.

- Therefore, appropriate measures shall be taken for an operation at temperatures below +5°C to ensure a safe function of the valve.



⚠ WARNING

Use in EX areas

If the valve or the plant is operated in a potentially explosive atmosphere, the valid directive and the installation instructions in this operating manual must be observed.



⚠ CAUTION

Before starting the system, the entire pipeline system must be thoroughly cleaned.



⚠ CAUTION

Steps should be taken to ensure that no external forces are exerted on the fitting.



⚠ CAUTION

Malfunction due to contamination

Internal or external dirt may impair the function of the fitting or the safety equipment.

- ➢ Therefore the fitting must be operated in a way that protects it from external influences.
  - – The fitting must be cleaned internal and external at regular intervals.
  - – The fitting must be maintained at regular intervals.
  - – The fitting must be checked for its function at regular intervals.

3 Delivery, transport and storage

3.1 Delivery

- Immediately after receipt check the delivery for completeness and transport damages.
- Remove the packaging from the product.
- Retain packaging material, or expose of according to local regulations.

3.2 Transport



⚠ CAUTION

Risk of injury and damage to the product

During the transport the generally acknowledged rules of technology, the national accident prevention regulations and company internal work and safety regulations must be observed.

3.3 Storage



NOTICE

Damage to the product due to improper storage!

Observe storage instructions

avoid a prolonged storage



INFORMATION

Recommendation for longer storage

We recommend regularly checking the product and the prevailing storage conditions during long storage times.

- To avoid damage to seals and bearings,
  - products up to DN 125 / OD 5 inch should be stored horizontally for maximum 6 months.
  - products larger than DN 125 / 5 inch, should be stored in the upright position with the actuator on top.
- Don't store any objects on the products.
- Protect the products for wetness, dust and dirt.
- The product should be stored in a dry and well ventilated room at a constant temperature (optimal indoor temperature: 25 C ±5 ; indoor humidity data 60% ±5%).
- Protect seals, bearings and plastic parts for UV light and ozone.

4 Function and operation

4.1 Description of function

The valve opens against spring force if the set pressure is crossed. It closes if the current pressure drops under the set pressure (see Characteristic curves)

4.2 Manual operation

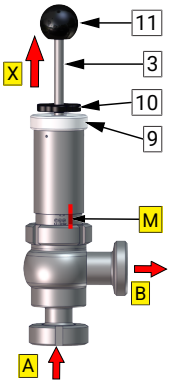

The manual lifting device serves to manually actuate the valve.

- Short term lifting of the valve takes place by pulling on the spindle (3) via the spherical button (11) and/or the lifting nut (10) in the direction X. This will raise the valve and the medium disperses via outlet B.
- For a longer lifting of the valve (e.g. when cleaning), the lifting nut (10) is turned in a clockwise direction to the adjusting nut (9). Now mark (M) the position with a pen/pencil. nscrew the adjusting nut (9) anticlockwise using 2 complete turns. The valve will be raised and the medium disperses via outlet B.

In order to close the valve, the adjusting nut (9) is turned in an anticlockwise direction using 2 complete turns as far as the mark. Screw the lifting nut (10) anticlockwise as far as the spherical button (11) and tighten.

4.3 Pressure setting

The set pressure can be adjusted to scaling in the pressure area by longitudinal positioning of the adjustment nut (9).



⚠ CAUTION

Valve plate don't close

The positioning of the lifting nut is tightened in the operating mode using the spherical button. Were the lifting to come and rest upon the adjusting nut the valve would not close tight enough to ensure a seal against the leakage of fluids.

5 Commissioning, service and maintenance

5.1 Commissioning

5.1.1 Installation instructions



Fitting position

The bung valve must be installed vertically at connection "A" (see figure).

Functional check

After installation or after manual actuation of the valve, the closing function and the function in the operating state must be checked in accordance with the specified performance data.

5.1.2 General welding guidelines

Sealing elements integrated in weld components must generally be removed prior to welding. To prevent damage, welding should be undertaken by certified personnel (EN ISO 9606-1). Use the TIG (Tungsten Inert Gas) welding process.

⚠ CAUTION

Damage and injuries due to high temperature supply

To avoid a distortion of the components, all welding parts must be welded to stress-relieved.

Allow all components to cool before assembling.

NOTICE

Damage due to impurities

Impurities can cause damage to the seals and seals area.

Clean inside areas prior to assembly.

5.1.3 Use in EX area

For valves or plants/installations that are operated in the ATEX area, sufficient bonding (grounding) must be ensured. (see e.g. ATEX Directives EC; UKSI 696:2019-Schedule 25)

5.2 Service

RECOMMENDATION

Replacement of seals

To achieve optimal maintenance cycles, the following points must be observed!

- When replacement of seals, all product-contacting seals should be replaced.
- Only original spare parts may be installed.

Maintenance interval

The maintenance intervals depend on the operating conditions "temperature, temperature-intervals, medium, cleaning medium, pressure and opening frequency". We recommend replacing the seals 1-year cycle. The user, however should establish appropriate maintenance intervals according to the condition of the seals.

Lubricant recommendation

	EPDM; HNBR; NBR; PTFE; FKM; k-flex	-	Klüber Paraliq GTE703*
	Silicone	-	Klüber Sintheso pro AA2*
	Thread	-	Interflon Food*

*) It is only permitted to use approved lubricants, if the respective fitting is used for the production of food or drink. Please observe the relevant safety data sheets of the manufacturers of lubricants.

5.3 Cleaning

Cleaning

The optimum cleaning is carried out with the tank or pipe cleaning.

For this, open and close the valve several times.

6 Technical data

6.1 Bunging valve Type 6268

Model	Bunging valve	
Size	• DN 15 / 20 • DN 25 / 32 • DN 40 / 50	
Connection type	• Liner / nut DIN 11851 • Thread DIN 11851	
Leakage rate	A (EN 12266-1)	
Temperature range	Operating temperature: (depends on medium)	+4° to +95°C
	Sterilisation temperature: (SIP 30 min)	EPDM +140°C
Material (in contact with product)	Stainless steel:	1.4404 / AISI 316L 1.4301 / AISI 304
	Surface:	Ra ≤ 0,8µmmat finish
	Sealing material:	• EPDM

Adjusting range	Working area (bar)	Opening- / Closing pressure difference
	0.2 - 2.0	± 0,1 bar (>2 bar ± 10 %)
	0.5 - 3.0	± 0,1 bar (>2 bar ± 10 %)
	1.5 - 4.0	± 0,1 bar (>2 bar ± 10 %)

6.2 Identification

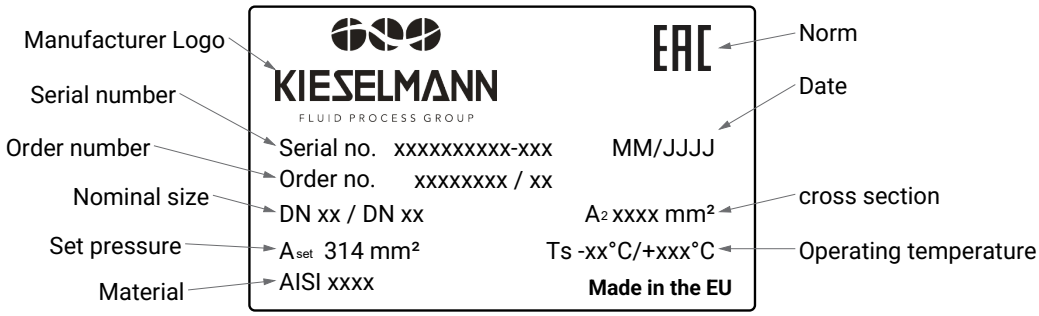

7 Disassembly and assembly

7.1 Disassembly

Replacement wear parts (D1), (D2), (D3)

- Screw the lifting nut (10) down to the adjustment nut (9) and screw for another 2-3 turns so that the valve plate is raised from the seal seat.
- Unscrew the slotted nut (6).
- Remove valve insert from housing (VG).
- Unscrew the spherical button (11) and lifting nut (10).
- Carefully pull the pisten (2) with spindle (3) from the spring housing (5).

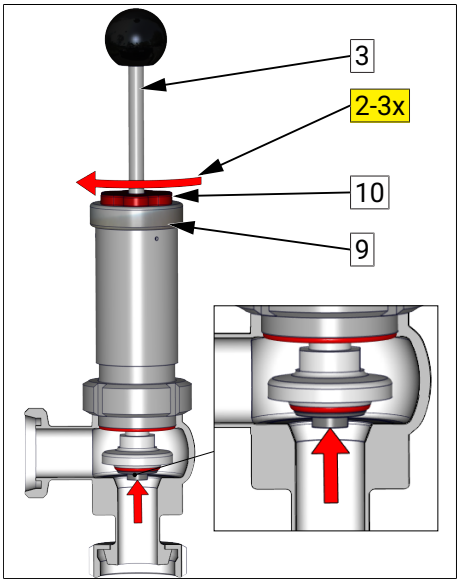

NOTICE

When pulling the spindle (3) from the spring housing (5), make sure that the thread of the spindle does not damage the bearing (4) or the lip seal (D2).

The piston (2) is joined to the spindle with a high-strength screw locking device and must not be disassembled.

- Re-clamp the spindle at position (F) (see Fig. /page [▶ 15]) in the vice between the soft jaws.
- Unscrew the piston plate (1) above the width flat SW1 and remove the O-ring (D1).
- Remove the O-ring (D3) and the lip seal (D2).

Dismantle the pressure spring

- Unscrew the adjustment nut (9) from the spring housing (5). The pressure spring will relax.
- Remove the slotted nut (6), spring guide (12) (depending on the model), spring (8) and the spring plate (7).

7.2 Assembly

- Before installation, thoroughly clean and slightly lubricate mounting areas and running surfaces.
- Assemble in reverse order.

NOTICE

Assembly O-Ring (D1)

The installation spaces on the piston (2) and the piston plate (1) have to be carefully cleaned and slightly lubricated.

Clamp the spindle (3) between the soft jaws in the vice and clamp onto the surface (F) (see Fig. / page [▶ 15]).

Dampen the O-ring (D1) slightly with suitable grease and insert into the piston (2).

Screw in the piston plate (1) as far as the metallic arrester and make sure that the O-ring (D1) does not rotate with it or twist.

- Check the function according to the specified performance data in the operating state.

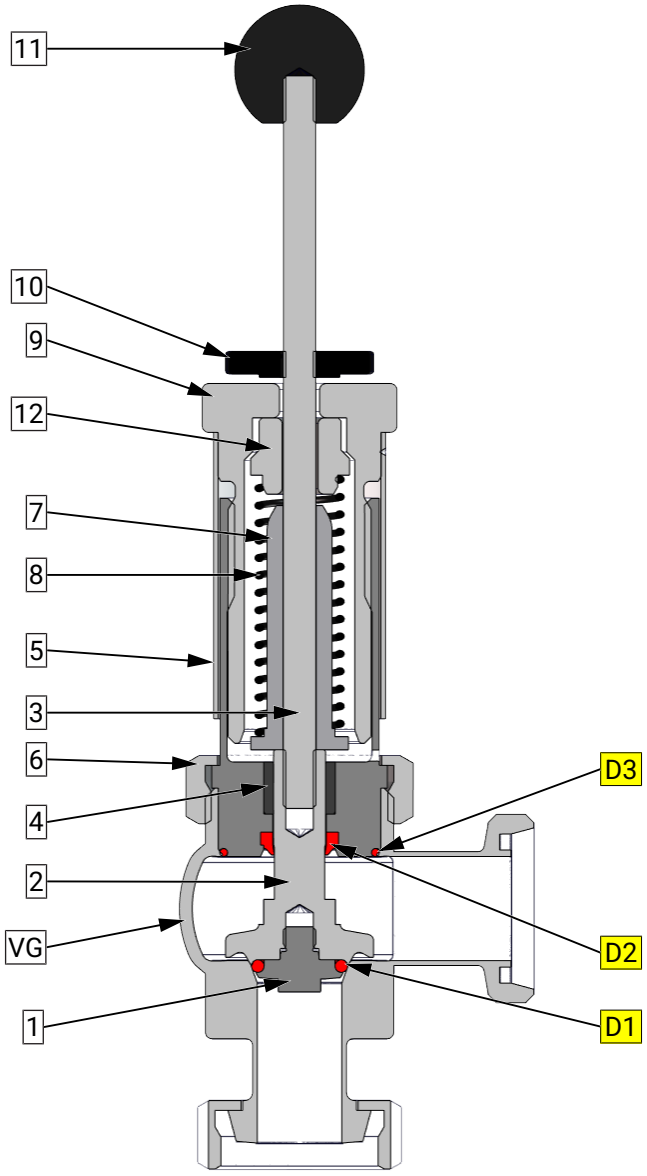

8 Drawings and dimensions

8.1 Drawings

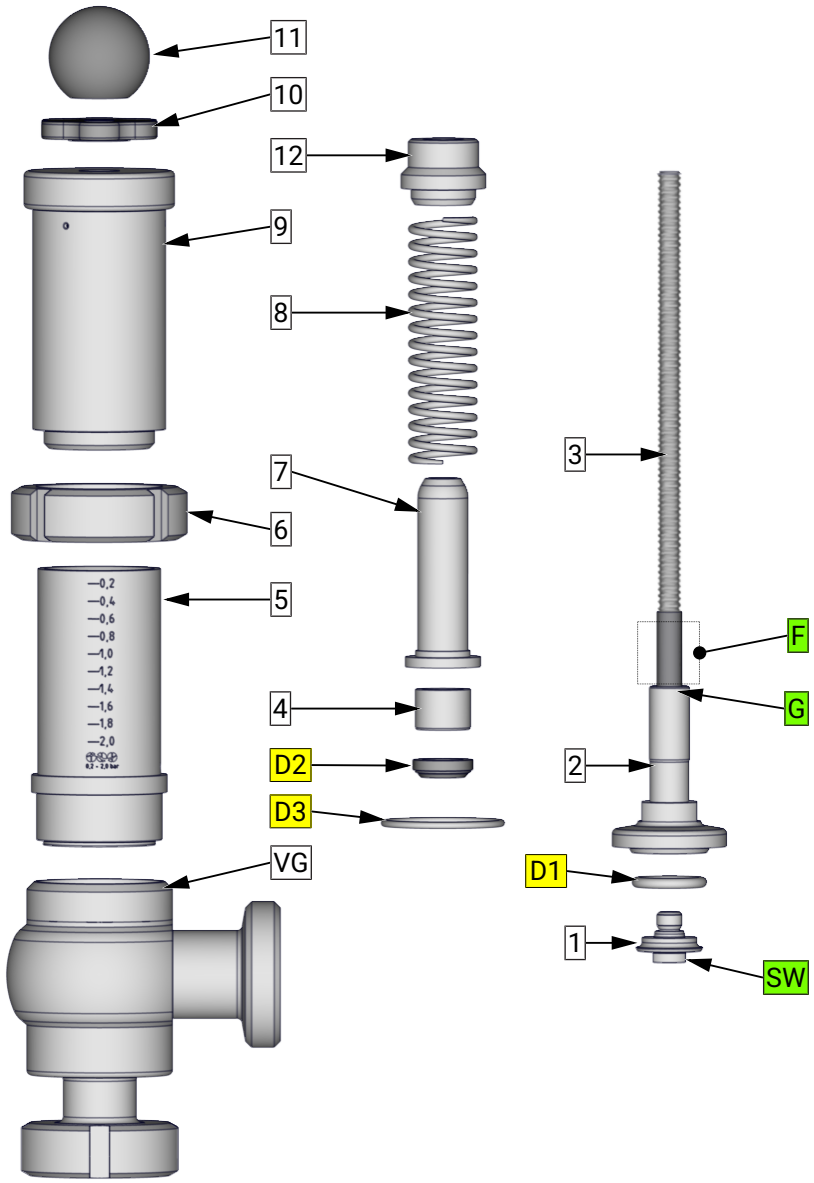

1	Piston plate	2	Piston
3	Spindle	4	Slide bearing
5	Housing	6	Slotted nut
7	Spring disc	8	Pressure spring
9	Adjusting nut	10	Lifting nut
11	Spherical head	12	Guide
D1	O-ring	D2	Sealing ring
D3	O-ring	F	Clamping surface
G	Screw locking, high-strength	SW	Wrench size
VG	Valve housing		

8.2 Dimensions

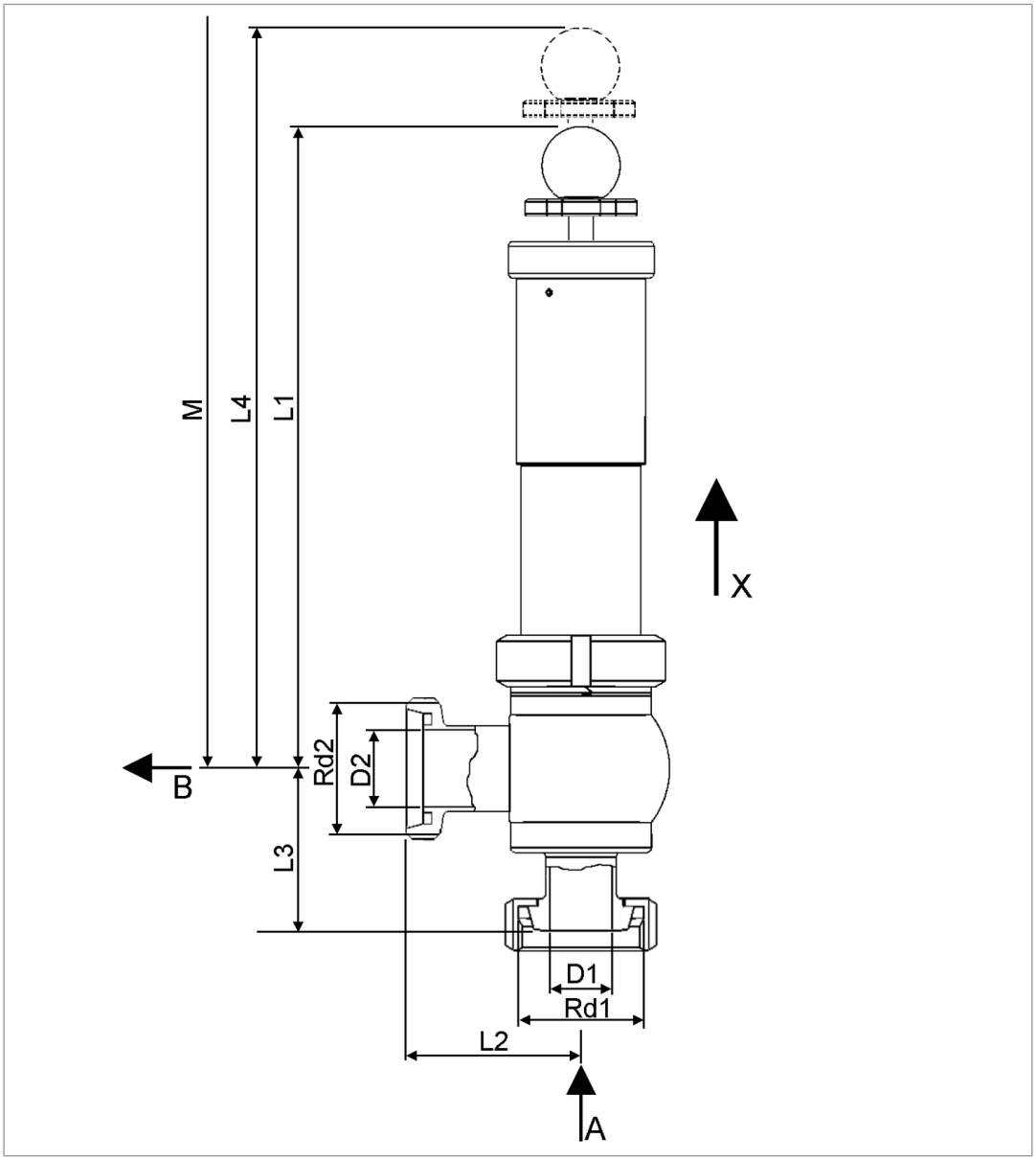

DN	D1	D2	Rd1	Rd2	L1	L2	L3	L4	M Assembly dimension
15 / 20	16	26	Rd34x1/8	Rd52x1/8	275	77	61,5	283,5	335
25 / 32	26	32	Rd52x1/6	Rd58x1/6	278	72	72	291,5	345
40 / 50	38	50	Rd65x1/6	Rd78x1/6	286	74	91	319	360

9 Wearing parts

9.1 Wearing parts list

			DN		
item	**Description**	**Material**	**15 / 25**	**25 / 32**	**40 / 50**
	Seal kit (D1-D3)	EPDM	6268 016 993-000	6268 026 993-000	6268 041 993-000
D1	O-ring	EPDM	2304 021 040-170	2304 021 040-170	2304 032 040-069
D2	Lip seal	EPDM	2330 016 007-054	2330 016 007-054	2330 016 007-054
D3	O-ring	EPDM	2304 042 025-170	2304 042 025-170	2304 042 025-170
4	Slide bearing	JSM-1622-16	8050 016 016-156	8050 016 016-156	8050 016 016-156

10 Characteristic curves

10.1 Performance chart DN 15 / 20

DN 15/20 __ 0,2 – 2,0 bar

Set pressure	Closing pressure	Flow rate at increased pressure		
		+ 0,1 bar	+ 0,15 bar	+ 0,2 bar
[bar]	[bar]	[m³/h]	[m³/h]	[m³/h]
0,2	0,17	43,0	86,0	111,8
0,4	0,35	86,0	113,5	129,0
0,6	0,55	111,8	129,0	146,2
0,8	0,7	137,6	163,4	172,9
1,0	0,9	133,3	171,1	177,1
1,2	1,1	163,4	176,3	189,1
1,4	1,3	172,0	189,1	197,7
1,6	1,5	197,7	204,6	217,5
1,8	1,7	218,4	223,5	232,1
2,0	1,9	232,1	236,4	239,0

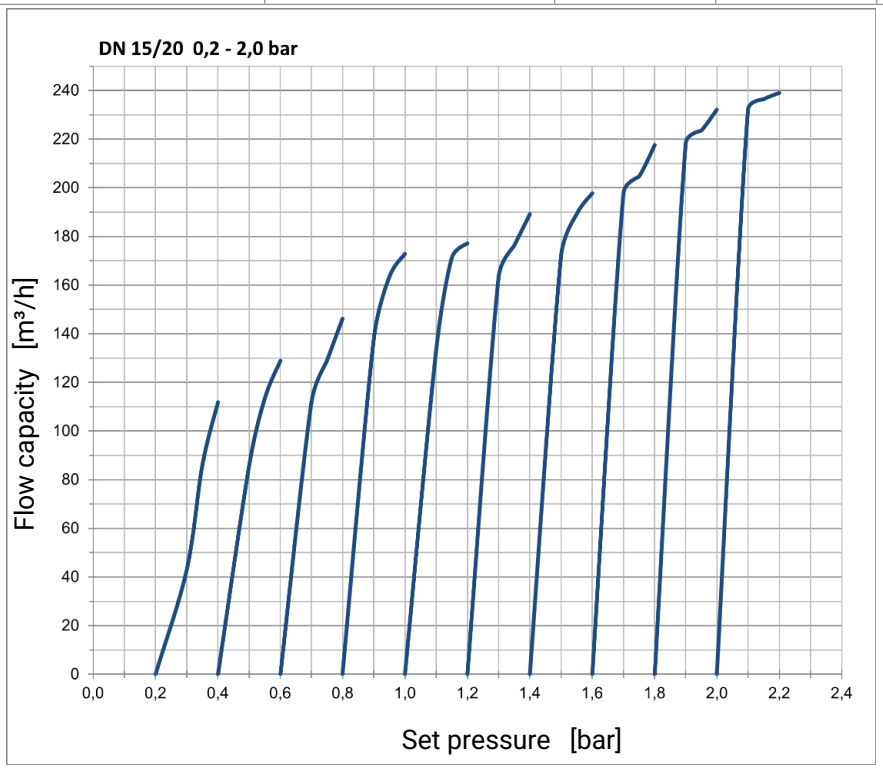

DN 15/20 __ 0,5 – 3,0 bar

Set pressure	Closing pressure	Flow rate at increased pressure		
		+ 0,1 bar	+ 0,15 bar	+ 0,2 bar
[bar]	[bar]	[m³/h]	[m³/h]	[m³/h]
0,50	0,46	18,1	112,6	121,2
0,75	0,67	52,4	120,4	137,6
1,00	0,94	165,1	180,5	189,1
1,25	1,2	172,0	184,8	192,6
1,50	1,4	172,0	188,3	205,5
1,75	1,7	188,7	214,6	225,5
2,00	1,9	206,8	226,5	247,2
2,25	2,1	215,3	235,7	257,3
2,50	2,4	223,8	245,0	267,4
2,75	2,6	242,5	265,5	289,7
3,00	2,9	268,4	293,9	320,7

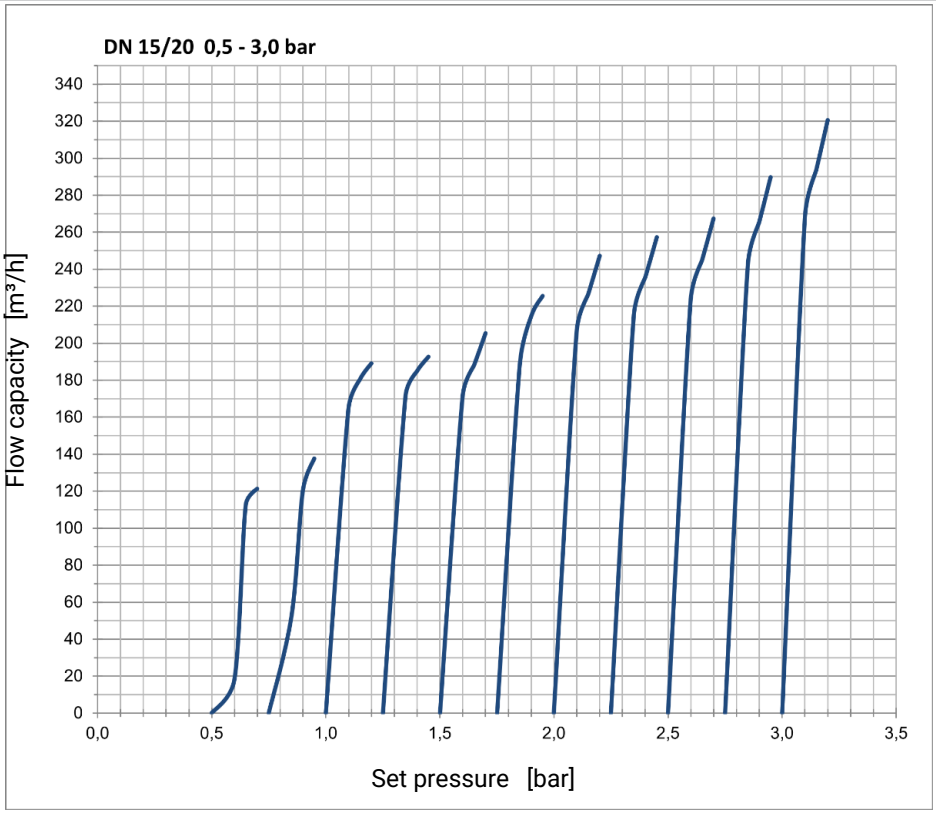

DN 15/20 __ 1,5 – 4,0 bar

Set pressure	Closing pressure	Flow rate at increased pressure		
		+ 0,1 bar	+ 0,15 bar	+ 0,2 bar
[bar]	[bar]	[m³/h]	[m³/h]	[m³/h]
1,50	1,40	178,0	190,9	206,3
1,75	1,70	202,0	218,4	221,0
2,00	1,90	222,5	240,5	243,3
2,25	2,2	216,9	234,4	237,2
2,50	2,4	247,4	267,4	270,6
2,75	2,7	289,0	312,3	316,0
3,00	2,9	317,9	343,6	347,6
3,25	3,2	322,3	348,4	352,5
3,50	3,4	401,7	434,2	439,3
3,75	3,6	440,2	475,8	481,5
4,00	3,9	476,4	514,9	521,0

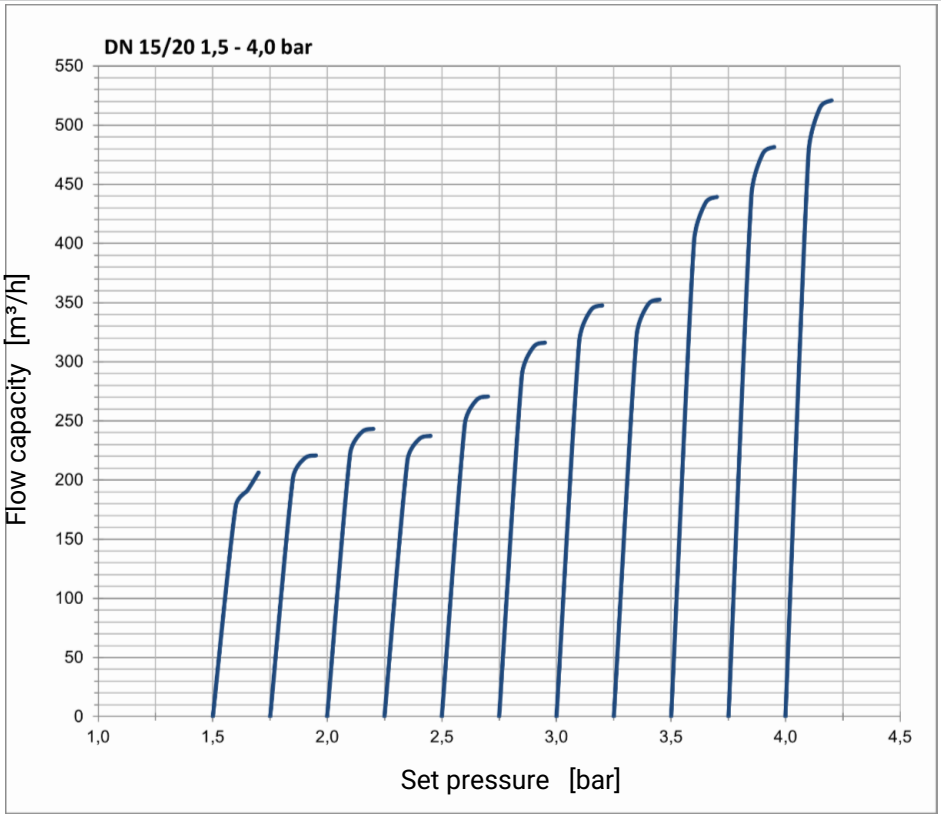

10.2 Performance chart DN 25 / 32

DN 25/32 __ 0,2 – 2,0 bar

Set pressure	Closing pressure	Flow rate at increased pressure		
		+ 0,1 bar	+ 0,15 bar	+ 0,2 bar
[bar]	[bar]	[m³/h]	[m³/h]	[m³/h]
0,2	0,15	49,4	103,3	148,3
0,4	0,35	113,6	154,8	191,0
0,6	0,55	110,5	142,7	200,8
0,8	0,7	109,5	165,5	210,6
1,0	0,9	131,3	188,3	219,5
1,2	1,1	133,3	199,5	219,8
1,4	1,3	168,6	223,3	229,0
1,6	1,5	152,2	222,7	238,5
1,8	1,7	163,4	225,3	250,0
2,0	1,9	221,0	245,9	259,4

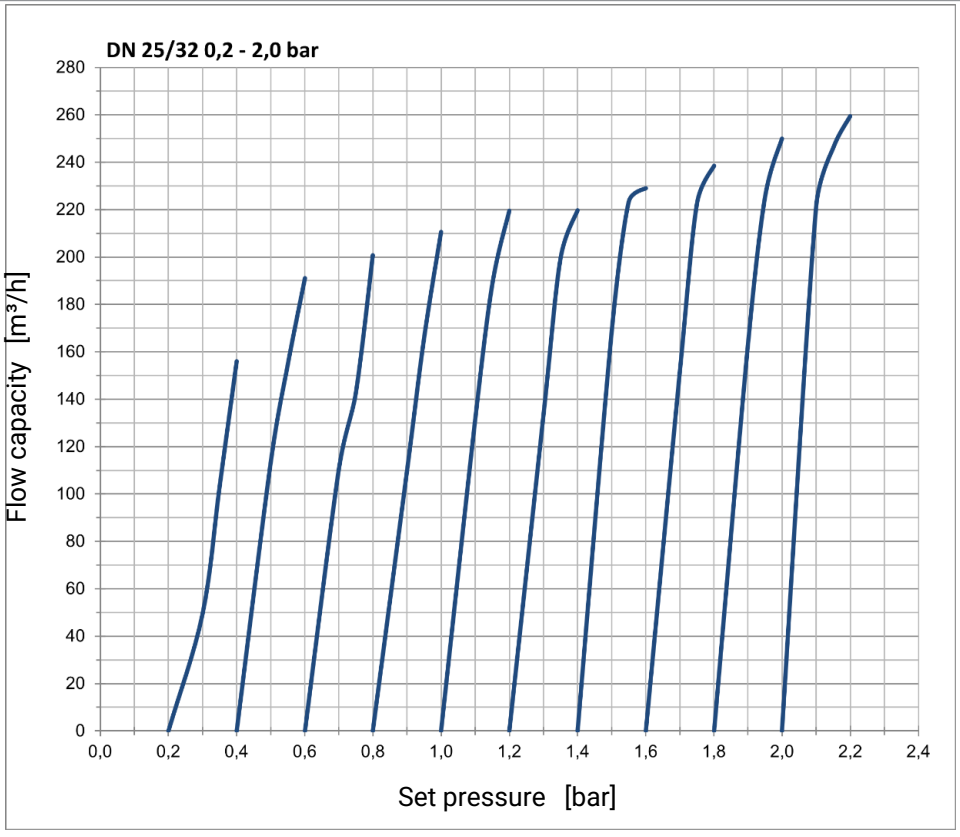

DN 25/32 __ 0,5 – 3,0 bar

Set pressure	Closing pressure	Flow rate at increased pressure		
		+ 0,1 bar	+ 0,15 bar	+ 0,2 bar
[bar]	[bar]	[m³/h]	[m³/h]	[m³/h]
0,50	0,45	98,8	135,0	179,2
0,75	0,70	117,7	148,5	202,8
1,00	1,90	149,4	181,1	224,5
1,25	1,2	165,7	210,9	234,5
1,50	1,4	148,5	207,3	244,4
1,75	1,7	165,9	223,5	251,9
2,00	1,9	171,2	230,6	259,9
2,25	2,2	176,5	237,7	267,9
2,50	2,4	185,2	249,5	281,1
2,75	2,7	196,2	264,4	297,9
3,00	2,8	207,3	279,2	314,7

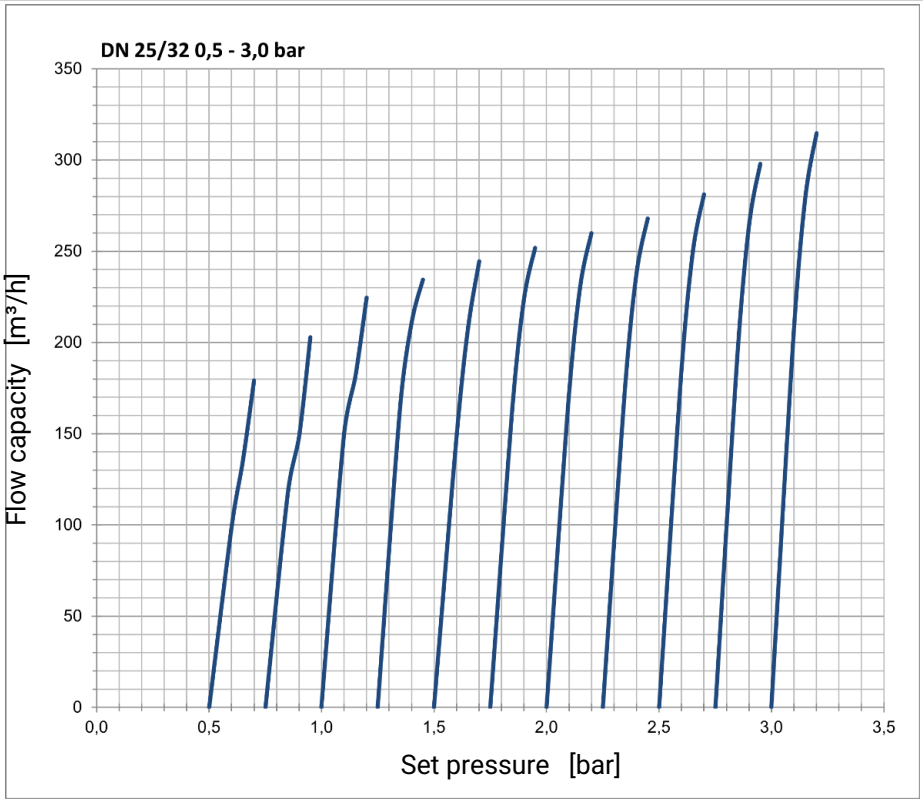

DN 25/32 __ 1,5 – 4,0 bar

Set pressure	Closing pressure	Flow rate at increased pressure		
		+ 0,1 bar	+ 0,15 bar	+ 0,2 bar
[bar]	[bar]	[m³/h]	[m³/h]	[m³/h]
1,50	1,45	18,9	187,4	206,5
1,75	1,7	157,3	204,6	223,6
2,00	1,9	156,2	203,2	240,7
2,25	2,2	164,6	214,1	253,6
2,50	2,4	182,7	237,6	281,6
2,75	2,7	198,2	257,8	305,4
3,00	2,9	213,7	277,9	329,3
3,25	3,2	237,1	308,4	365,4
3,50	3,4	257,5	334,9	396,8
3,75	3,6	277,8	361,4	428,2
4,00	3,9	312,4	406,3	481,5

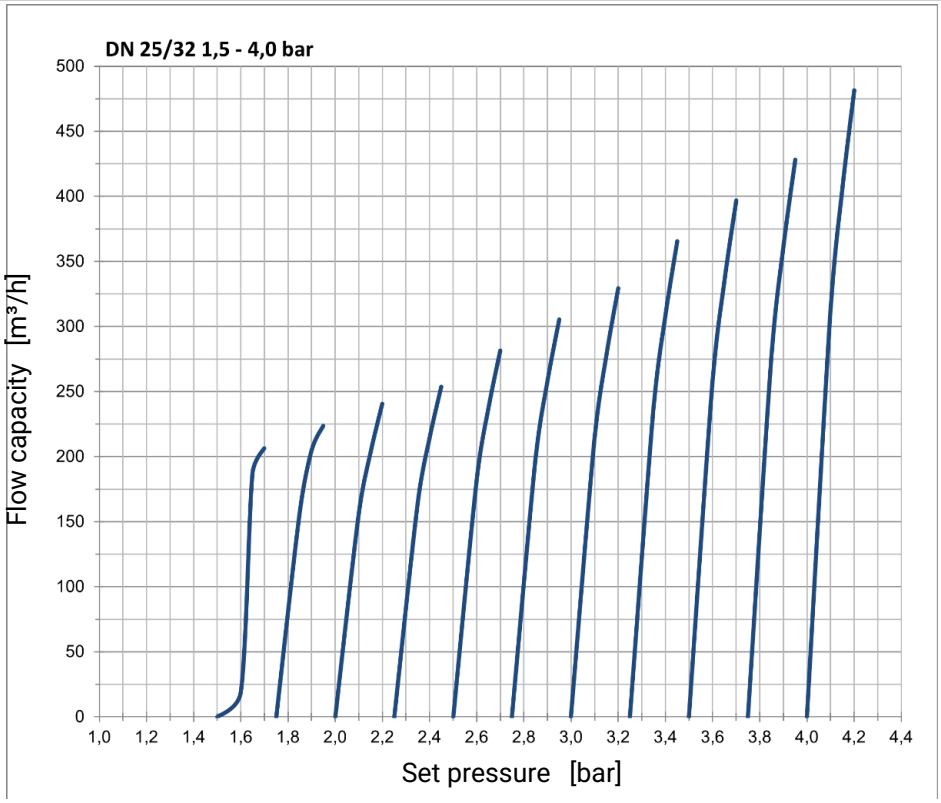

10.3 Performance chart DN 40 / 50

DN 40/50 __ 0,2 – 2,0 bar

Set pressure	Closing pressure	Flow rate at increased pressure		
		+ 0,1 bar	+ 0,15 bar	+ 0,2 bar
[bar]	[bar]	[m³/h]	[m³/h]	[m³/h]
0,2	0,15	29,1	78,2	120,4
0,4	0,35	31,8	100,6	127,2
0,6	0,55	44,3	104,0	137,6
0,8	0,7	56,7	110,5	145,3
1,0	0,9	87,7	116,9	153,0
1,2	1,1	78,2	134,1	170,5
1,4	1,3	68,8	135,0	184,8
1,6	1,5	98,0	146,2	190,0
1,8	1,7	118,6	153,0	198,6
2,0	1,9	132,4	197,7	207,2

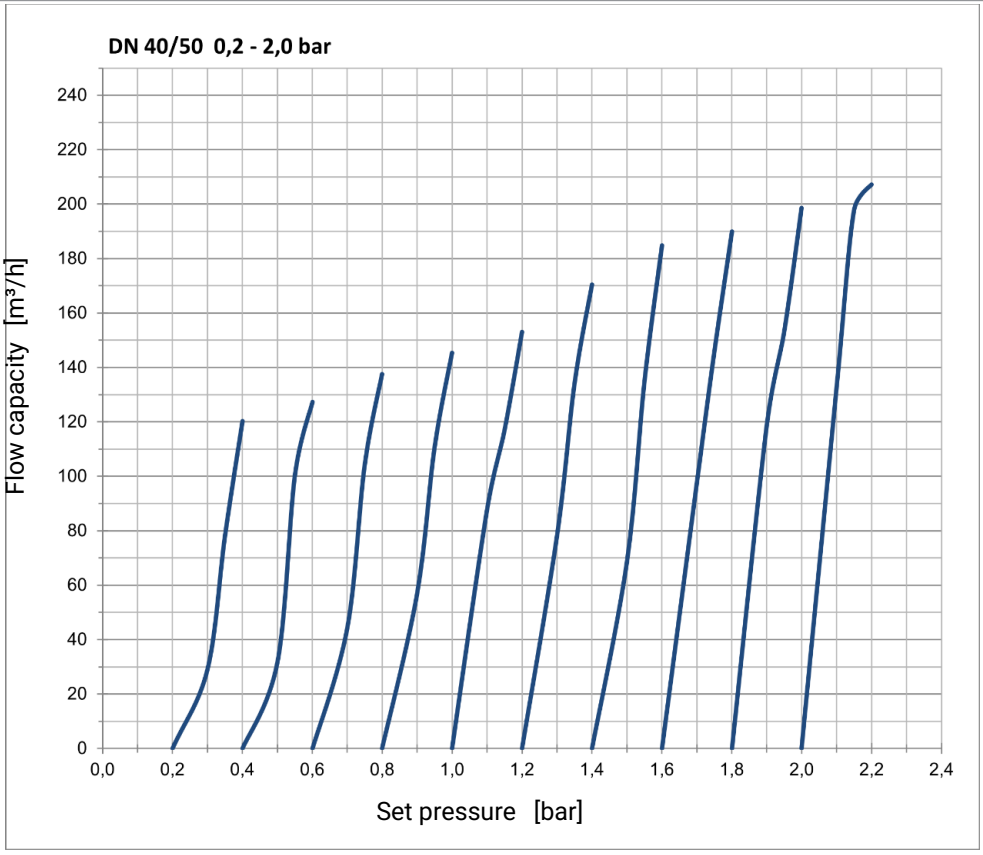

DN 40/50 __ 0,5 – 3,0 bar

Set pressure	Closing pressure	Flow rate at increased pressure		
		+ 0,1 bar	+ 0,15 bar	+ 0,2 bar
[bar]	[bar]	[m³/h]	[m³/h]	[m³/h]
0,50	0,46	18,1	57,9	110,6
0,75	0,67	18,6	64,0	129,9
1,00	0,94	17,2	94,6	135,0
1,25	1,2	10,3	86,0	140,1
1,50	1,4	13,8	104,9	142,7
1,75	1,7	19,8	107,5	155,6
2,00	1,9	21,0	114,0	165,1
2,25	2,1	23,2	125,9	182,3
2,50	2,4	25,7	139,8	202,5
2,75	2,6	28,3	153,8	222,7
3,00	2,9	29,1	158,1	229,0

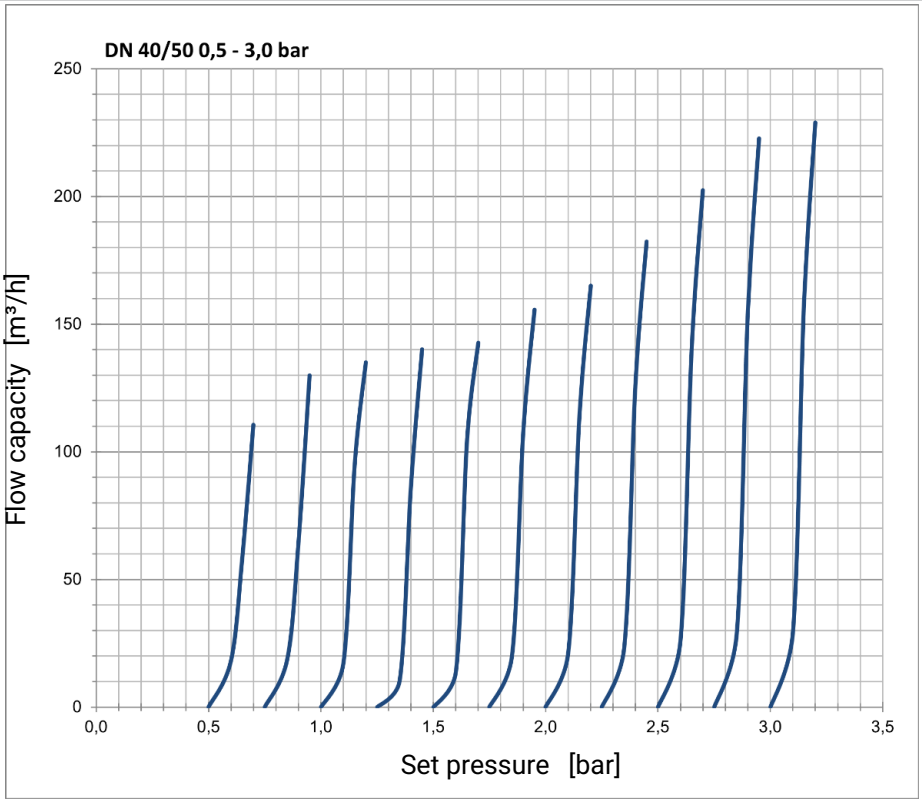

DN 40/50 __ 1,5 – 4,0 bar

Set pressure	Closing pressure	Flow rate at increased pressure		
		+ 0,1 bar	+ 0,15 bar	+ 0,2 bar
[bar]	[bar]	[m³/h]	[m³/h]	[m³/h]
1,50	1,40	28,8	77,4	142,7
1,75	1,70	17,2	116,1	154,8
2,00	1,90	19,6	132,5	166,8
2,25	2,2	20,4	137,9	173,7
2,50	2,4	20,9	141,0	177,6
2,75	2,7	21,3	144,1	181,5
3,00	2,9	21,9	147,8	186,2
3,25	3,2	22,5	151,6	190,9
3,50	3,4	23,6	159,1	200,3
3,75	3,6	24,8	167,3	210,6
4,00	3,9	26,0	175,5	221,0

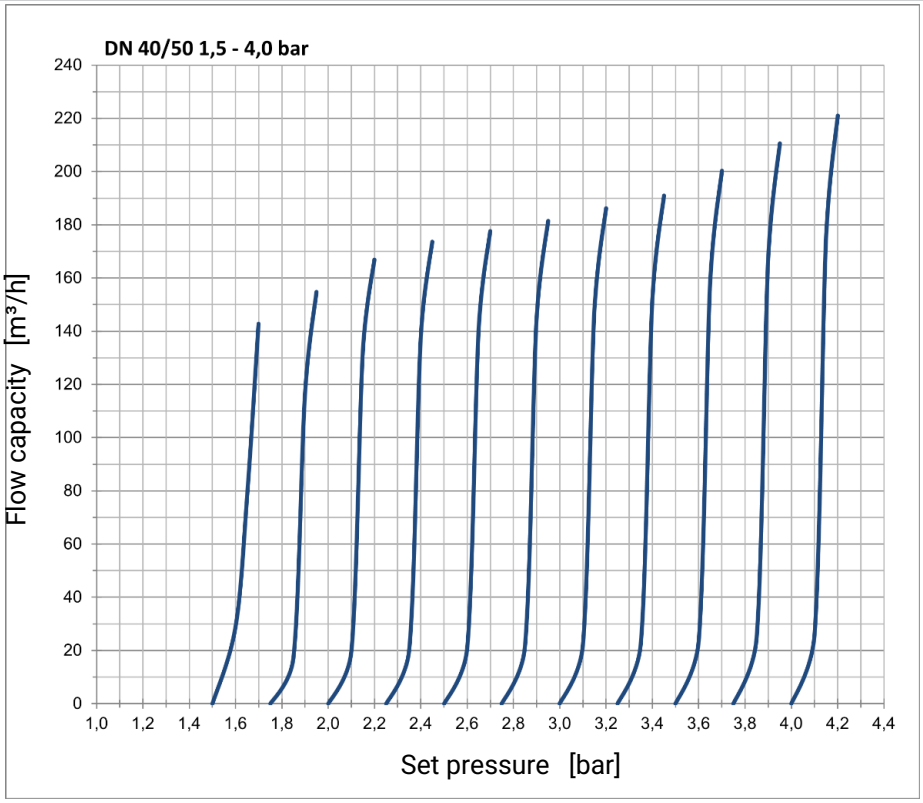

11 Appendix

11.1 Declaration of incorporation

Declaration of Incorporation

according to Directive 2006/42/EC of the European Parliament and the Council of 17 May 2006

Manufacturer:
KIESELMANN GmbH
Paul-Kieselmann-Str. 4-10
D-75438 Knittlingen

We declare that the following pressure equipment

Designation	Function
Pneumatic Linear actuator	pneumatically operation of valves
Pneumatic Quarter-turn actuator	pneumatically operation of valves
Butterfly Valve (pneumatically operated)	Separation of medium flow
Ball Valve (pneumatically operated)	Separation of medium flow
Single seat Valve (pneumatically operated)	Separation of medium flow
Changeover Valve (pneumatically operated)	Separation of medium flow
Double-Seat mixproof Valve (pneumatically operated)	Separation of medium flow
Control Valve (pneumatically operated)	Regulation of medium flow
Throttling Valve (pneumatically operated)	Regulation of medium flow
Tank Outlet Valve (pneumatically operated)	Separation of medium flow
Sampling Valve (pneumatically operated)	Separation of medium flow

complies with the definition of an „incomplete machine“ according to Article 2 of the European Machinery Directive 2006/42/EG, when fitted in or merged with other machines or incomplete machines which also comply with the provision of the Directive.

Applied harmonized standards:

Directive 2014/68/EU
EN ISO 12100

Person responsible for documentation:

Achim Kauselmann
Documentation / Development
KIESELMANN GmbH

Knittlingen, 10.10.2020

i.V. Uwe Heisswolf
Head of Development

KIESELMANN
FLUID PROCESS GROUP

Notes

KIESELMANN GmbH

Paul-Kieselmann-Str. 4-10
D - 75438 Knittlingen

☎ +49(0) 7043 371-0 • 🖷 +49(0) 7043 371-125
www.kieselmann.de • info@kieselmann.de

Copyright: © KIESELMANN FLUID PROCESS GROUP