Ball Sector Valve 4032

with high precision valve actuator, DN25 - DN250

Control valve with high-precision electric actuator for ball sector valves



- High-precision actuator
- Suitable for abrasive media (e.g. chalk milk and paper materials)
- Developed for use as a basis weight valve
- Actuation via step signal or analogue 4-20 mA (standard)
- Feedback via analogue signal 4-20 mA
- Easily replaceable seat ring
- Low maintenance
- Manual override

Technical Information Valve

Design		flangeless wafertype		
Nominal sizes		DN 25 up to DN 250		
Body material	cast parts	1.4408 (CF8M)		
	turned parts	1.4404 (316L)		
Bearing material		high temperature plain bearing		
Cutting site to the actuator		mounting kit DIN/ISO 5211		
Nominal pressure	DN25 - DN50	PN40 (for flanges PN 10 - PN 40), ANSI150, ANSI300		
	DN 65 - DN100	PN25 (for flanges PN 10 - PN 25), ANSI150, ANSI300		
	DN 125 - DN 250	PN16 (for flanges PN 10 - PN 16), ANSI150		
Fluid Temperature		-40°C up to +220°C depending on the sealings		
Ambient temperature		-40°C up to +80°C depending on the acuator special version on request		
Vacuum		up to 50 mbar abs.		
Characteristic		almost equal percentage		
Rangeability		300:1		
Classification DIN EN ISO15848-1		ISO FE-BH-CC3-SSA0-t(-40°C/+220°C)-PN40-ISO 15848-1		
Leakage rate		Seat ring: PTFE / PEEK Ball sector: Polished stainless steel	Seat ring: PTFE / PEEK Ball sector: Hard chrome-plated stainless steel	Seat ring: Stellite Ball sector: Stainless steel hard chrome-plated and lapped
% of Kvs IEC 60534-4		< 0,00001 IV-S1	< 0,00005 IV-S1	< 0,0005 IV-S1

Technical Information Actuator

Actuator	S1500		S2000		S4000
Actuator colour	blue		red		
Design	KS2				
Set point	analogue*	Bus System	analogue*	Bus System	Step signal
Set point signal	4 - 20 mA / 0 - 10 V / 3-point	Modbus 485	4 - 20 mA / 0 - 10 V / 3-point	Modbus 485	Step point control 24V
Pulse duration	-				40ms
Burden	-				
Supply energy, electrical	24 V DC [±10%]				
Actuator	Step motor with gearbox				
Turning angle detection	Integrated in the actuator				
Control	In the actuator				
Resolution at the spherical sector	1300 steps / 90°		1600 steps / 90°		4000 steps / 90°
Reverse hysteresis	0,1°				
Adjusting range	0 - 90°				
Limit stops	Mechanical limit stops inside of the actuator				
Feed back	4 - 20 mA				
Ambient temperature limit, actuator	-40°C up to +80°C				
Ambient temperature limit, control cabinet	-				
Protection class acc. DIN 40050	IP 67				

*Resolution of the control signal at least 12 bits, with 14 bits for the S4000 actuator

Schubert & Salzer Control Systems GmbH, Bunsenstr. 38, 85053 Ingolstadt, Tel: +49 (0)841-9654 0, Fax: +49 (0)841 9654 590
info.cs@schubert-salzer.com, www.schubert-salzer.com

Ball Sector Valve 4032

with high precision valve actuator

SCHUBERT SALZER

Working pressure max.

Nominal size	zulässiger Differenzdruck (delta p)									
	seat ring PTFE			seat ring PEEK				seat ring Stellit		
DN	up to 80°C bar	120°C bar	170°C bar	up to 80°C bar	120°C bar	170°C bar	220°C bar	up to 80°C bar	170°C bar	220° C bar
25-50	25	16	6	40	40	25	16	40	40	25
65-100	16	12	5	25	25	16	10	25	25	16
125-150	16	12	4	16	16	12	8	16	16	12
200-250	16	12	4	16	16	12	8	16	16	12

Actuators for mounting according DIN/ISO5211, pilot pressure 5 - 6 bar
(for less than 5 bar pilot pressure, please inform us)

Temperature limits

	Sealing seatring									
	Viton		EPDM		NBR		FFKM		PFA-Silicone	
Seatring	Tmin [°C]	Tmax [°C]	Tmin [°C]	Tmax [°C]	Tmin [°C]	Tmax [°C]	Tmin [°C]	Tmax [°C]	Tmin [°C]	Tmax [°C]
PTFE	-15	170	-40	140	-30	100	-15	170	-45	170
PEEK	-15	200	-40	140	-30	100	-15	220	-45	220
Stellit	-15	200	-40	140	-30	100	-15	220	-45	220

Kvs-Values

DN	Kvs-Wert reduziert auf					
	100%	63%	40%	25%	16%	6,3%
25	25	12,7	7,9	5,3	3,6	1,45
40	70	40	25			
50	109	65	41			
65	190					
80	300					
100	390					
125	756					
150	995					
200	1365					
250	2220					
300	3840					

Operating time for 90° / starting current

DN	Operating time 90°			Starting current
	S1500	S2000	S4000	
DN25 - DN50	30s (4s - 15min)		225s (0,4°/s)	5A
DN65 - DN100	30s (4s - 15min)		225s (0,4°/s)	7A
DN125 - DN150	30s (4s - 15min)		225s (0,4°/s)	10A
DN200 - DN250	30s (4s - 15min)		225s (0,4°/s)	13A

Ball Sector Valve 4032

with high precision valve actuator

Dimensions KS2 with actuator S1500, S2000 or S4000

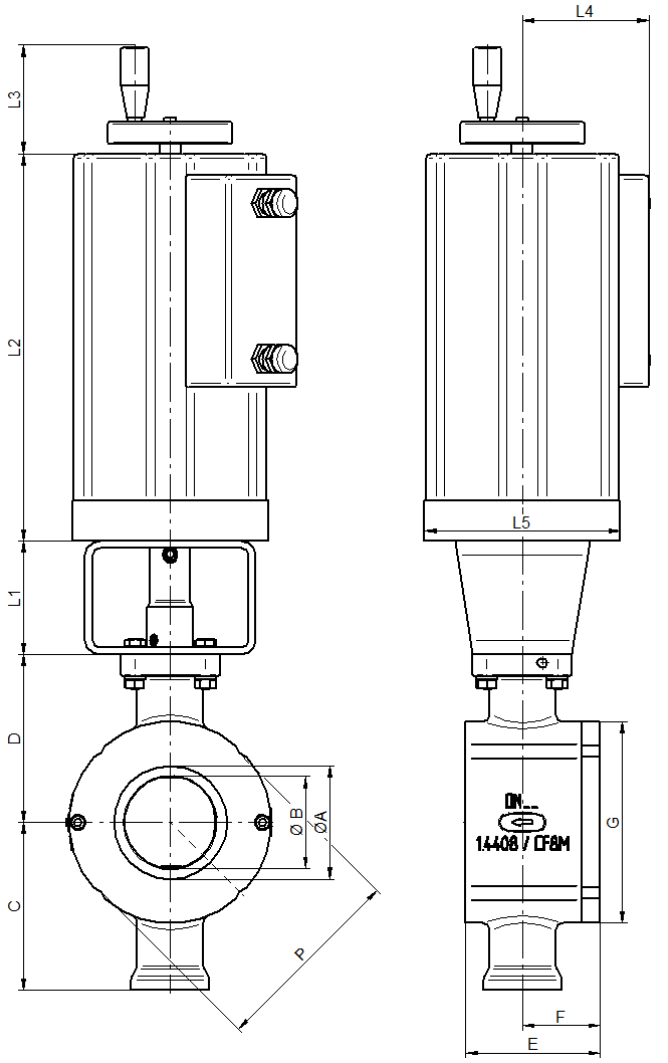

DN	A	B	C	D	E	F	L1	L2	L3	L4	L5	Weight (kg)
25	25	20	85	85	50	26	60	212	75	90	138	10,2
40	41	32	92	92	58	31	60	212	75	90	138	11
50	53	40	95	95	71	38	60	212	75	90	138	11,5
65	65	50	115,5	115,5	85	49	80	273	75	93	138	16
80	80	65	118,5	118,5	95	55	80	273	75	93	138	17,3
100	100	80	129,5	129,5	112	62	80	273	75	93	138	20,9
125	100	125	177,5	177,5	148	85	80	307	75	93	175	30,9
150	150	120	187	187	170	95	80	307	75	93	175	34,8
200	200	155	216	216	210	120	80	331	75	93	175	63,7
250	250	195	242	242	270	145	80	331	75	93	175	92

DN	PN					ANSI 150				ANSI 300			
	PN	G	P	M	Amount	G	P	M	Amount	G	P	M	Amount
25	PN40	75	73	45	4	75	67,6	45	4	79	73	45	4
40	PN40	96	94	45	4	96	87	45	4	99	94	45	4
50	PN40	112	106	45	4	112	106	45	4	112	0	0	0
65	PN25	129	0	0	0	129	125	45	4	129	0	0	0
80	PN25	142	0	0	0	142	138	45	4	150	0	0	0
100	PN25	174	164	22,5	8	176	0	0	0	182	0	0	0
125	PN16	200	194	22,5	8	200	194	45	8	---	---	---	---
150	PN16	220	0	0	0	220	0	0	0	---	---	---	---
200	PN16	280	0	0	0	280	0	0	0	---	---	---	---
250	PN16	338	329	22,5	8	338	0	0	0	---	---	---	---

*Dimensions in mm

Text and pictures are not binding. We reserve the right, to alter the equipment.