Sliding Gate Valve 8021

GS 3 series - DN 15 up to DN 250

Pneumatic sliding gate valve optionally with integrated positioner for regulating or shutting off liquid and gaseous media for industrial applications



- Space saving wafer type construction
- Lowest possible weight
- Quiet operation
- Fast response time
- Greatly reduced energy consumption rates due to short strokes and low actuating forces on the throttle element
- High Kvs-values
- Meets the requirements of TA-Luft 2021

Technical Information

Design	wafer-type design -for flanges acc. DIN EN 1092-1 Form B or ASME B16.5 RF - with threaded connection (only PN40 in stainless steel; DN15 - DN50)		
Nominal Sizes	DN 15 - 250		
Nominal pressure acc. EN 1333	PN 40 (fits also to PN 10-PN 25) PN 100 (fits also to PN 63) PN 16 and PN 25	DN 15 - DN 150 DN 15 - DN 80 DN 200 - DN 250	
Nominal pressure acc. ASME B16.5	ANSI 150 ANSI 300 ANSI 600	DN 15 - DN 250 DN 15 - DN 150 DN 15 - DN 80	
Nominal pressure acc. JIS for flanges with raised face	10K 20K	DN 15 - DN 50 DN 15 - DN 40	
Fluid Temperature	Versions from -60°C up to 350°C		
Ambient temperature	Positioner type 8049: -10°C up to +75°C Positioner type 8047: -15°C up to +60°C Other positioner versions: -40°C up to +100°C		
Rangeability / Characteristic	Positioner type 8047: Positioner type 8049:	30 : 1 40 : 1 linear / 80 : 1 equal percentage versions up to 200:1	
Spezific leakage rate shaft and body sealing	ISO FE-BH-CC3-SSA0-t(-40°C/+350°C)-PN40-ISO 15848-1		
Marking ATEX non electric	II 2G Ex h IIC T6…T1 X Gb II 2D Ex h IIIC 85°C…530°C X Db		
Applications acc. DGRL 2014/68/EU	stainless steel or carbon steel body body made of Alloy C-276 body made of stainless steel with threaded ends		up to category II up to category I up to category I

Fluid temperature

Rating	PN16 - PN40	PN 100	ANSI 150	ANSI 300	ANSI 600
Body material cpl. stainless steel					
Tmin [°C]	-60	-60	-29	-29	-29
Tmax [°C]	350	350	350	350	350
Body material carbon steel with stainless steel body cover					
Tmin [°C]	-60	-10	-20	-20	-20
Tmax [°C]	350	350	350	350	350
Body material Alloy C-276					
Tmin [°C]	-60	-60	-29	-29	-29
Tmax [°C]	350	350	350	350	350

Schubert & Salzer Control Systems GmbH, Bunsenstr. 38, 85053 Ingolstadt, Tel: +49 (0)841-9654 0, Fax: +49 (0)841 9654 590
info.cs@schubert-salzer.com, www.schubert-salzer.com

Materials Special versions

	Version in stainless steel
Valve body	Stainless steel , 1.4408
Bodycover	Stainless steel, 1.4404 resp. 316L
Valve stem	Stainless steel, 1.4571
Coupling ring	Stainless steel, 1.4581
Tube for packing	Stainless steel 1.4408
Packing	PTFE filled with carbon (Spring 1.4310)
Body seal	Graphite with stainless steel inlay

	Version in C-steel
Valve body	C-steel, 1.0619
Bodycover	Stainless steel, 1.4404 resp. 316L
Valve stem	Stainless steel, 1.4571
Coupling ring	Stainless steel, 1.4581
Tube for packing	Stainless steel, 1.4408
Packing	PTFE filled with carbon (spring 1.4310)
Body seal	Graphite with stainless steel inlay

	Version in Alloy C-276
Valve body	Alloy C-276, 2.4819
Bodycover	Alloy C-276, 2.4819
Valve stem	Alloy C-276, 2.4819
Coupling ring	Alloy C-276, 2.4819
Tube for packing	Alloy C-276, 2.4819
Packing	PTFE filled with carbon (spring Alloy C4, 2.4610)
Body seal	Pure graphite

	For all versions
Diaphragm casing	aluminium, KTL-coated or stainless steel
Actuator springs	stainless steel 1.4310

Kvs values

Ordering code		-	A	1	B	6	2	7	C	3	4	8	5	9
DN	Charact.	100 %	63 %	40 %	25 %	20%	16 %	12 %	10 %	6,3 %	2,5 %	2 %	1%	0,4%
15	(mod.) linear	4	2,6	1,7	1,4	-	0,71	0,49	0,44	0,26	0,14	0,08	0,04	0,018
	eq. perc.	1,7	-	1,1	-	0,35	-	-	-	0,1	-	-	-	-
20	(mod.) linear	6,4	-	-	-	-	1	-	-	-	-	0,13	-	-
	eq. perc.	3	-	1,5	-	-	-	-	-	-	-	-	-	-
25	(mod.) linear	11	6,4	4	-	-	1,6	-	0,93	0,62	0,26	-	0,14	0,04
	eq. perc.	5	-	2,4	-	1,1	-	-	-	0,35	-	-	-	-
32	(mod.) linear	16	10	-	-	-	-							
	eq. perc.	8	4,7	-	-	-	-							
40	(mod.) linear	26	16	11	7	-	-							
	eq. perc.	11	8,5	-	2,75	-	-							
50	(mod.) linear	45	28	20	12	10	-							
	eq. perc.	19	12	-	-	-	3							
65	(mod.) linear	52	35	-	15									
	eq. perc.	30	19	-	8									
80	(mod.) linear	92	58	40										
	eq.perc.	48	35	-										
100	(mod.) linear	154	95	62										
	eq.perc.	77	48	-										
125	(mod.) linear	237	-	95										
	eq.perc.	116	-	-										
150	(mod.) linear	338	212	-										
	eq.perc.	147	90	-										
200	(mod.) linear	560	352	-										
	eq.perc.	284	-	-										
250	(mod.) linear	910	575											
	eq.perc.	435												

Definition of the Kvs-Value:

The Kvs-value corresponds to the volume flow of water (m^3/h), passing the valve if a pressure difference of 1 bar is applied. Kvs is the Kv-value for a fully opened valve from the series production (acc. DIN IEC 534).

	Slide pairing overview							
Moving plate	Carbon	Carbon	Carbon	Carbon	SFC	STN2	STN3	Hard metal
Fixed plate	STN2	STN1	Brass	Alloy	STN2	STN2	STN3	Hard metal
Nominal Sizes	DN15 - DN250	DN15 - DN150	DN15 - DN100	DN15, DN25, DN40, DN50, DN80	DN15 - DN250	DN15 - DN250	DN15, DN25, DN50	DN15, DN20, DN40, DN50
Operating temperature	-200°C up to +450°C (max. 300°C with oxidising gases)	-60°C up to +300°C	-60°C up to +230°C	-200°C up to +450°C (max. 300°C with oxidising gases)	-60°C up to +300°C	-200°C up to +530°C	-200°C up to +530°C	-200°C up to +530°C
Leakage rate*	1E-6 from the Kvs value	1E-6 from the Kvs value	1E-6 from the Kvs value	1E-6 from the Kvs value	5E-6 from the Kvs value	1E-5 from the Kvs value	1E-5 from the Kvs value	1E-5 from the Kvs value
Leakage IEC 60534-4	IV-S1	IV-S1	IV-S1	IV-S1	IV-S1	IV	IV	IV
Leakage EN 12266-1	E	E	E	E	F	F	F	F
Limitation		Δ P max. 16 bar for liquids, max. 25 bar for gases	Δ P max. 10 bar for liquids, max. 40 bar for gases		Δ P max. 25 bar			
Typical applications	Gases, liquids at low differential pressures without cavitation; no pressure surges	Pure gases and liquids, no cavitation; no pressure surges	Oxygen, Pure gases and liquids, no cavitation; no pressure surges	Aggressive acids and alkalis, seawater, no cavitation; no pressure surges	Vapour, pure liquids	Gases, vapour and liquids also with cavitation	Liquids at high differential pressures	Liquids at very high differential pressures

* For DN15 with reduction less than 25 %, different leakage rates possible

Limitations

Additionally to the limitations of the pressure rating valves made of Alloy C-276 as well as valves with threaded connections are limited to applications of the category I of the PED 2014/68/EU.

		maximum admissible operating pressure in bar for application of category I of the pressure equipment directive 2014/68/EU				
		DN15	DN25	DN40	DN50	DN80*
Fluid group 1	gaseous	X	X	25	20	12,5
	liquid	X	X	50	40	25
Fluid group 2	gaseous	X	X	X	X	X
	liquid	X	X	X	X	X

X = no limitation

*DN80 is not available with threaded connections.

Sliding Gate Valve 8021-GS3

with integrated digital positioner, Type 8049
(also on-off valves and valves with other side-mounted positioner)

SCHUBERT SALZER

Admissible differential pressures

For temperatures up to 120°C for PN pressure ratings up to 38°C for ANSI pressure ratings, for high temperatures the application limits must be taken into account.

Movable sealing disc made of carbon or SFC

	Max. allowed differential pressure P_{Diff} and min. supply air pressure $P_{Supply\ air}$ in bar									
Supply air	125 cm²				250 cm²					
DN	P_{Diff}	$P_{Supply\ air}$	P_{Diff}	$P_{Supply\ air}$	P_{Diff}	$P_{Supply\ air}$	P_{Diff}	$P_{Supply\ air}$	P_{Diff}	$P_{Supply\ air}$
15 **	102	3,0	102	3,6	102	2,3	102	2,7	102	3,6
20	102	3,0	102	3,6	102	2,3	102	2,7	102	3,6
25 **	88 (102)*	3,0	88 (102)*	3,6	88 (102)*	2,3	88 (102)*	2,7	88 (102)*	3,6
32	88	3,1	102	3,8	102	2,3	102	3,0	102	3,6
40 **	67	3,4	83	4,1	88 (102)*	2,6	88 (102)*	3,0	88 (102)*	3,9
50 **	44	4,1	54	4,9	75	3,1	91	3,7	102	4,8
65	37	4,2	45	5,0	63	3,1	76	3,8	80	4,8
80 **	23	4,3	29	5,3	40	3,3	48	3,9	48	4,9
100	15	4,5	18,5	5,5	25	3,4	31	4,1	33	5,2
125	10	4,6	12,5	5,6	17,5	3,5	21	4,2	23	5,3
150	7,6	4,6	9,4	5,6	13	3,5	15,5	4,2	16	5,3
200	4,4	4,7	5,4	5,7	7,5	3,6	9,1	4,3	12	5,7
250	2,7	4,7	3,3	5,7	4,6	3,6	5,6	4,3	7,5	5,7
Spring quantity	6 springs		8 springs		6 springs		8 springs		12 springs	
Spring Configuration	Code „-“		Code 4		Code „-“		Code 4		Code 6	

Standard

* Values in brackets for valves made of carbon steel or alloy C-276
** Nominal size available in Alloy C-276 version

	Max. allowed differential pressure P_{Diff} and min. supply air pressure $P_{Supply\ air}$ in bar											
Supply air	500 cm²						750 cm²					
DN	P_{Diff}	$P_{Supply\ air}$	P_{Diff}	$P_{Supply\ air}$	P_{Diff}	$P_{Supply\ air}$	P_{Diff}	$P_{Supply\ air}$	P_{Diff}	$P_{Supply\ air}$	P_{Diff}	$P_{Supply\ air}$
15 **	102	2,3	102	2,7	102	3,3	-	-	-	-	-	-
20	102	2,3	102	2,7	102	3,3	-	-	-	-	-	-
25 **	88 (102)*	2,3	88 (102)*	2,7	88 (102)*	3,3	-	-	-	-	-	-
32	102	2,3	102	2,7	102	3,4	-	-	-	-	-	-
40 **	88 (102)*	2,4	88 (102)*	2,8	88 (102)*	3,5	-	-	-	-	-	-
50 **	102	2,9	102	3,4	102	4,1	-	-	-	-	-	-
65	80	2,9	80	3,4	80	4,1	-	-	-	-	-	-
80 **	48	3,0	48	3,4	48	4,2	-	-	-	-	-	-
100	33	3,1	33	3,6	33	4,3	20	1,3	33	2,9	33	3,4
125	23	3,1	23	3,7	23	4,4	13,5	1,3	23	2,9	23	3,4
150	16	3,1	16	3,6	16	4,4	10	1,4	16	2,9	16	3,4
200	15	3,5	16	4,1	16	4,9	5,9	1,4	16	3,2	16	3,7
250	9,5	3,6	10,5	4,2	10,5	5,0	3,6	1,4	12	3,4	12	3,9
Spring quantity	12 springs		16 springs		22 springs		12 springs		18 springs		24 springs	
Spring Configuration	Code „-“		Code 8		Code B		Code L		Code „-“		Code P	

Standard

* Values in brackets for valves made of carbon steel or alloy C-276
** Nominal size available in Alloy C-276 version

Upper limits of the pressure rating

	Upper limits for admissible pressures in bar					
	PN16	PN40	PN100	ANSI150	ANSI 300	ANSI 600
P max. carbon steel/ Alloy C-276	16	40	100	19,6	51,1	102,1
P max. stainless steel				19,0	49,6	99,3

Sliding Gate Valve 8021-GS3

with integrated digital positioner, Type 8049
(also on-off valves and valves with other side-mounted positioner)

SCHUBERT SALZER

Admissible differential pressures

For temperatures up to 120°C for PN pressure ratings up to 38°C for ANSI pressure ratings, for high temperatures the application limits must be taken into account.

Movable sealing disc made of STN 2, STN 3 or hard metal

	Max. allowed differential pressure P_{Diff} and min. supply air pressure $P_{Supply\ air}$ in bar									
Supply air	125 cm²				250 cm²					
DN	P_{Diff}	$P_{Supply\ air}$	P_{Diff}	$P_{Supply\ air}$	P_{Diff}	$P_{Supply\ air}$	P_{Diff}	$P_{Supply\ air}$	P_{Diff}	$P_{Supply\ air}$
15	102	3,0	102	3,6	102	2,3	102	2,7	102	3,6
20	81	3,2	100	3,9	102	2,4	102	2,8	102	3,7
25	60	3,5	75	4,2	88 (102)*	2,7	88 (102)*	3,1	88 (102)*	4,0
32	45	3,7	56	4,4	77	2,8	93	3,4	102	4,3
40	31	3,9	38	4,7	53	3,0	64	3,6	72	4,6
50	18,5	4,4	22	5,3	31	3,1	38	4,0	51	5,4
65	15	4,4	18,5	5,4	26	3,4	31	4,1	42	5,4
80	9,2	4,5	11	5,5	15,5	3,4	19	4,1	25	5,5
100	5,7	4,6	7	5,6	9,7	3,5	11,5	4,3	15,5	5,7
125	3,8	4,7	4,7	5,7	6,5	3,6	7,8	4,3	10,5	5,7
150	2,8	4,7	3,4	5,7	4,8	3,6	5,8	4,3	7,8	5,7
200	1,6	4,7	1,9	5,7	2,7	3,6	3,3	4,3	4,4	5,8
250	0,9	4,7	1,2	5,7	1,6	3,6	2	4,3	2,7	5,8
Spring quantity	6 springs		8 springs		6 springs		8 springs		12 springs	
Spring Configuration	Code „-“		Code 4		Code „-“		Code 4		Code 6	

Standard

* Values in brackets for valves made of carbon steel or alloy C-276

	Max. allowed differential pressure P_{Diff} and min. supply air pressure $P_{Supply\ air}$ in bar											
Supply air	500 cm²						750 cm²					
DN	P_{Diff}	$P_{Supply\ air}$	P_{Diff}	$P_{Supply\ air}$	P_{Diff}	$P_{Supply\ air}$	P_{Diff}	$P_{Supply\ air}$	P_{Diff}	$P_{Supply\ air}$	P_{Diff}	$P_{Supply\ air}$
15	102	2,3	102	2,7	102	3,3	-	-	-	-	-	-
20	102	2,3	102	2,8	102	3,4	-	-	-	-	-	-
25	88 (102)*	2,5	88 (102)*	2,9	88 (102)*	3,5	-	-	-	-	-	-
32	102	2,6	102	3,1	102	3,7	-	-	-	-	-	-
40	73	2,7	73	3,2	73	3,8	-	-	-	-	-	-
50	64	3,3	77	4,0	78	4,8	-	-	-	-	-	-
65	53	3,4	63	4,0	63	4,8	-	-	-	-	-	-
80	32	3,4	37	4,1	37	4,8	-	-	-	-	-	-
100	19,5	3,5	23	4,2	30	5,3	7,7	1,4	30	3,5	33	4,1
125	13	3,6	16	4,3	20	5,4	5,1	1,4	20	3,6	23	4,2
150	9,8	3,6	11,5	4,3	14,5	5,4	3,8	1,4	14,5	3,6	16	4,2
200	5,6	3,6	6,7	4,3	8,4	5,4	2,1	1,4	8,5	3,6	10	4,3
250	3,4	3,6	4,1	4,3	5,1	5,4	1,3	1,4	5,2	3,6	6,2	4,3
Spring quantity	12 springs		16 springs		22 springs		12 springs		18 springs		24 springs	
Spring Configuration	Code „-“		Code 8		Code B		Code L		Code „-“		Code P	

Standard

* Values in brackets for valves made of carbon steel or alloy C-276

Upper limits of the pressure rating

	Upper limits for admissible pressures in bar					
	PN16	PN40	PN100	ANSI150	ANSI 300	ANSI 600
P max. carbon steel/ Alloy C-276	16	40	100	19,6	51,1	102,1
P max. stainless steel				19,0	49,6	99,3

Sliding Gate Valve 8021-GS3

with integrated p/p - positioner, Type 8047

Admissible differential pressures

For temperatures up to 120°C for PN pressure ratings up to 38°C for ANSI pressure ratings, for high temperatures the application limits must be taken into account.

Movable sealing disc made of carbon or SFC

	Max. allowed differential pressure P_{Diff} and min. supply air pressure $P_{Supply\ air}$ in bar									
Supply air	125 cm²				250 cm²					
DN	P_{Diff}	$P_{Supply\ air}$	P_{Diff}	$P_{Supply\ air}$	P_{Diff}	$P_{Supply\ air}$	P_{Diff}	$P_{Supply\ air}$	P_{Diff}	$P_{Supply\ air}$
15**	102	3,0	102	3,6	102	2,3	102	2,7	102	3,6
20	77	3,3	96	3,9	102	2,4	102	2,9	102	3,7
25**	57	3,5	71	4,3	88 (98)*	2,7	88 (102)*	3,1	88 (102)*	4,0
32	42	3,7	52	4,5	73	2,9	88	3,4	102	4,4
40**	29	3,9	36	4,7	49	3,0	60	3,6	80	4,8
50**	17	4,4	21	5,3	29	3,4	35	4,0	48	5,4
65	14	4,4	17,5	5,4	24	3,4	29	4,1	39	5,4
80**	8,5	4,5	10,5	5,5	14,5	3,5	17,5	4,1	23	5,5
100	5,2	4,6	6,5	5,7	9	3,5	10,5	4,3	14,5	5,7
125	3,5	4,7	4,3	5,7	6	3,6	7,3	4,3	9,8	5,7
150	2,6	4,7	3,2	5,7	4,4	3,6	5,3	4,3	7,2	5,7
200	1,4	4,7	1,8	5,7	2,5	3,6	3	4,3	4,1	5,8
250	0,9	4,7	1,1	5,7	1,5	3,6	1,8	4,3	2,5	5,8
Spring quantity	6 springs		8 springs		6 springs		8 springs		12 springs	
Spring Configuration	Code „-“		Code 4		Code „-“		Code 4		Code 6	

Standard

* Values in brackets for valves made of carbon steel or alloy C-276
** Nominal size available in Alloy C-276 version

	Max. allowed differential pressure P_{Diff} and min. supply air pressure $P_{Supply\ air}$ in bar											
Supply air	500 cm²						750 cm²					
DN	P_{Diff}	$P_{Supply\ air}$	P_{Luft}	$P_{Supply\ air}$	P_{Diff}	$P_{Supply\ air}$	P_{Diff}	$P_{Supply\ air}$	P_{Diff}	$P_{Supply\ air}$	P_{Diff}	$P_{Supply\ air}$
15**	102	2,3	102	2,7	102	3,3	102	1,0	102	2,3	102	2,7
20	102	2,3	102	2,8	102	3,4	102	1,0	102	2,3	102	2,7
25**	88 (102)*	2,5	88 (102)*	2,9	88 (102)*	3,6	78	1,1	88 (102)*	2,4	88 (102)*	2,8
32	102	2,7	102	3,1	102	3,8	57	1,1	102	2,5	102	3,0
40**	88 (101)*	3,0	88 (102)*	3,4	88 (102)*	4,1	39	1,2	88 (102)*	2,8	88 (102)*	3,2
50**	60	3,4	72	4,0	91	5,0	23	1,3	91	3,4	102	4,0
65	49	3,4	59	4,1	74	5,1	19	1,3	74	3,4	80	3,9
80**	29	3,4	35	4,1	45	5,2	11,5	1,3	45	3,4	48	4,0
100	18	3,5	22	4,3	27	5,3	7,1	1,4	27	3,5	33	4,2
125	12	3,6	14,5	4,3	18,5	5,4	4,7	1,4	18,5	3,6	22	4,3
150	9,1	3,6	10,5	4,3	13,5	5,4	3,5	1,4	13,5	3,6	16	4,3
200	5,2	3,6	6,2	4,3	7,8	5,4	2	1,4	7,8	3,6	9,4	4,3
250	3,1	3,6	3,8	4,3	4,8	5,4	1,2	1,4	4,8	3,6	5,8	4,3
Spring quantity	12 springs		16 springs		22 springs		12 springs		18 springs		24 springs	
Spring Configuration	Code „-“		Code 8		Code B		Code L		Code „-“		Code P	

Standard

* Values in brackets for valves made of carbon steel or alloy C-276
** Nominal size available in Alloy C-276 version

Upper limits of the pressure rating

	Upper limits for admissible pressures in bar					
	PN16	PN40	PN100	ANSI150	ANSI 300	ANSI 600
P max. carbon steel/ Alloy C-276	16	40	100	19,6	51,1	102,1
P max. stainless steel				19,0	49,6	99,3

Sliding Gate Valve 8021-GS3

with integrated p/p - positioner, Type 8047

Admissible differential pressures

For temperatures up to 120°C for PN pressure ratings up to 38°C for ANSI pressure ratings, for high temperatures the application limits must be taken into account.

Movable sealing disc made of STN 2, STN 3 or hard metal

	Max. allowed differential pressure P_{Diff} and min. supply air pressure $P_{Supply\ air}$ in bar									
Supply air	125 cm²				250 cm²					
DN	P_{Diff}	$P_{Supply\ air}$	P_{Diff}	$P_{Supply\ air}$	P_{Diff}	$P_{Supply\ air}$	P_{Diff}	$P_{Supply\ air}$	P_{Diff}	$P_{Supply\ air}$
15	55	3,5	68	4,3	95	2,7	102	3,2	102	4,1
20	37	3,8	46	4,6	64	2,9	78	3,5	102	4,6
25	25	3,9	31	4,8	43	3,0	53	3,6	71	4,8
32	17,5	4,0	22	4,9	30	3,1	36	3,7	49	5,0
40	11,5	4,1	14	5,0	19,5	3,2	23	3,8	32	5,1
50	6,6	4,5	8,1	5,5	11	3,5	13,5	4,2	18	5,6
65	5,3	4,6	6,6	5,5	9,1	3,5	11	4,2	14,5	5,6
80	3,1	4,6	3,9	5,6	5,4	3,5	6,5	4,2	8,8	5,6
100	1,9	4,7	2,4	5,7	3,3	3,6	4	4,2	5,3	5,7
125	1,2	4,7	1,5	5,7	2,2	3,6	2,6	4,3	3,5	5,8
150	0,9	4,7	1,1	5,7	1,6	3,6	1,9	4,3	2,6	5,8
200	0,5	4,7	0,6	5,7	0,9	3,6	1,1	4,3	1,5	5,8
250	0,3	4,7	0,4	5,7	0,5	3,6	0,6	4,3	0,9	5,8
Spring quantity	6 springs		8 springs		6 springs		8 springs		12 springs	
Spring Configuration	Code „-“		Code 4		Code „-“		Code 4		Code 6	

Standard

* Values in brackets for valves made of carbon steel or alloy C-276

	Max. allowed differential pressure P_{Diff} and min. supply air pressure $P_{Supply\ air}$ in bar											
Supply air	500 cm²						750 cm²					
DN	P_{Diff}	$P_{Supply\ air}$	P_{Diff}	$P_{Supply\ air}$	P_{Diff}	$P_{Supply\ air}$	P_{Diff}	$P_{Supply\ air}$	P_{Diff}	$P_{Supply\ air}$	P_{Diff}	$P_{Supply\ air}$
15	102	2,5	102	2,9	102	3,6	75	1,1	102	2,4	102	2,8
20	102	2,8	102	3,2	102	3,8	51	1,1	102	2,6	102	3,0
25	89	3,0	88 (102)*	3,6	88 (102)*	4,2	34	1,2	88 (102)*	2,8	88 (102)*	3,3
32	62	3,1	75	3,7	94	4,6	24	1,2	94	3,1	102	3,6
40	40	3,2	48	3,8	61	4,8	15,5	1,2	61	3,2	73	3,8
50	23	3,5	27	4,2	34	5,2	8,9	1,3	34	3,5	41	4,2
65	18,5	3,5	22	4,2	28	5,2	7,2	1,3	28	3,5	33	4,2
80	11	3,5	13	4,2	16,5	5,2	4,2	1,3	16,5	3,5	20	4,2
100	6,7	3,6	8,1	4,3	10	5,4	2,6	1,4	10	3,6	12	4,3
125	4,4	3,6	5,4	4,3	6,7	5,4	1,7	1,4	6,7	3,6	8,1	4,3
150	3,3	3,6	3,9	4,3	4,9	5,4	1,2	1,4	4,9	3,6	6	4,3
200	1,8	3,6	2,2	4,3	2,8	5,4	0,7	1,4	2,8	3,6	3,4	4,3
250	1,1	3,6	1,3	4,3	1,7	5,4	0,4	1,4	1,7	3,6	2	4,3
Spring quantity	12 springs		16 springs		22 springs		12 springs		18 springs		24 springs	
Spring Configuration	Code „-“		Code 8		Code B		Code L		Code „-“		Code P	

Standard

* Values in brackets for valves made of carbon steel or alloy C-276

Upper limits of the pressure rating

	Upper limits for admissible pressures in bar					
	PN16	PN40	PN100	ANSI150	ANSI 300	ANSI 600
P max. carbon steel/ Alloy C-276	16	40	100	19,6	51,1	102,1
P max. stainless steel				19,0	49,6	99,3

Application limits for GS3 valves made out of stainless steel

The actual maximum permissible operating pressure of the valve results from the minimum value of the pressure tables, the limitation by the pressure rating, the category according to DGRL 2014/68/EU and the application limits listed here. These pressures must not be exceeded for GS valves of the GS3 series made of stainless steel, even if the tensile force of the actuator would allow this.

PN16 + PN25

DN	Movable sealing disc carbon or SFC max. admissible pressures for GS3-valves in stainless steel						Movable sealing disc STN2, STN3 or hard metal max. admissible pressures for GS3-valves in stainless steel					
	100°C	150°C	200°C	250°C	300°C	350°C	100°C	150°C	200°C	250°C	300°C	350°C
200 (max. PN25)	16	16	15	13	12	11	8	7	6	5	4	3
250 (max. PN25)	10	9	9	8	7	6	5,7	5,4	5,1	4,1	3,4	2,9

Limitation for SFC-sliding discs: 300°C

PN40

DN	Movable sealing disc carbon or SFC max. admissible pressures for GS3-valves in stainless steel						Movable sealing disc STN2, STN3 or hard metal max. admissible pressures for GS3-valves in stainless steel					
	100°C	150°C	200°C	250°C	300°C	350°C	100°C	150°C	200°C	250°C	300°C	350°C
15-32	40	40	40	40	40	40	40	40	40	40	40	40
40	40	40	40	40	40	40	40	40	40	40	40	37
50	40	40	40	40	40	40	40	40	40	40	40	40
65	40	40	40	40	40	40	40	40	40	40	37	32
80	40	40	40	40	40	40	36	34	33	26	22	19
100	33	33	33	33	33	33	32	31	30	24	20	17
125	23	23	23	23	23	23	21	21	19	16	13	11
150	16	16	16	16	16	16	15	15	14	11	9	8

Limitation for SFC-sliding discs: 300°C

PN100

DN	Movable sealing disc carbon or SFC max. admissible pressures for GS3-valves in stainless steel						Movable sealing disc STN2, STN3 or hard metal max. admissible pressures for GS3-valves in stainless steel					
	100°C	150°C	200°C	250°C	300°C	350°C	100°C	150°C	200°C	250°C	300°C	350°C
15	100	100	100	93	84	79	100	100	100	93	84	79
20	100	100	89	81	73	68	100	100	89	81	73	68
25	88	81	70	63	57	54	88	81	70	63	57	54
32	100	93	80	73	65	62	100	93	80	73	65	60
40	88	81	70	63	57	54	72	69	65	53	43	37
50	100	100	100	100	100	94	77	73	70	56	46	40
65	80	80	80	79	71	67	62	59	56	45	37	32
80	48	48	48	48	48	44	36	34	33	26	22	19

Limitation for SFC-sliding discs: 300°C

ANSI150

DN	Movable sealing disc carbon or SFC max. admissible pressures for GS3-valves in stainless steel								Movable sealing disc STN2, STN3 or hard metal max. admissible pressures for GS3-valves in stainless steel							
	38°C	50°C	100°C	150°C	200°C	250°C	300°C	350°C	38°C	50°C	100°C	150°C	200°C	250°C	300°C	350°C
15-125	19,0	18,4	16,2	14,8	13,7	12,1	10,2	8,4	19,0	18,4	16,2	14,8	13,7	12,1	10,2	8,4
150	16,0	16,0	16,0	14,8	13,7	12,1	10,2	8,4	16,2	16,2	16,2	14,8	13,7	11,8	9,7	8,4
200	16,0	16,0	16,0	14,8	13,7	12,1	10,2	8,4	10,5	10,0	8,3	7,6	6,9	5,5	4,5	3,9
250	10,4	10,4	10,4	9,9	9,4	8,4	7,4	6,8	5,7	5,7	5,7	5,4	5,1	4,1	3,4	2,6

Limitation for SFC-sliding discs: 300°C

ANSI300

DN	Movable sealing disc carbon or SFC max. admissible pressures for GS3-valves in stainless steel								Movable sealing disc STN2, STN3 or hard metal max. admissible pressures for GS3-valves in stainless steel							
	38°C	50°C	100°C	150°C	200°C	250°C	300°C	350°C	38°C	50°C	100°C	150°C	200°C	250°C	300°C	350°C
15-65	49,6	48,1	42,2	38,5	35,7	33,4	31,6	30,3	49,6	48,1	42,2	38,5	35,7	33,4	31,6	30,3
80	48,0	48,0	42,2	38,5	35,7	33,4	31,6	30,3	36,6	36,6	36,6	34,8	33,0	26,8	22,0	19,0
100	33,0	33,0	33,0	33,0	33,0	33,0	31,6	30,3	33,0	33,0	33,0	31,7	30,1	24,4	20,1	17,3
125	23,0	23,0	23,0	23,0	23,0	23,0	23,0	23,0	22,0	22,0	22,0	21,0	19,9	16,1	13,2	11,5
150	16,0	16,0	16,0	16,0	16,0	16,0	16,0	16,0	16,0	16,0	16,0	15,4	14,6	11,8	9,7	8,4
200	16,0	16,0	16,0	14,8	13,7	12,1	10,2	8,4	10,5	10,0	8,3	7,6	6,9	5,5	4,5	3,9

Limitation for SFC-sliding discs: 300°C

ANSI600

DN	Movable sealing disc carbon or SFC max. admissible pressures for GS3-valves in stainless steel								Movable sealing disc STN2, STN3 or hard metal max. admissible pressures for GS3-valves in stainless steel							
	38°C	50°C	100°C	150°C	200°C	250°C	300°C	350°C	38°C	50°C	100°C	150°C	200°C	250°C	300°C	350°C
15-20	99,3	96,2	84,4	77,0	71,3	66,8	63,2	60,7	99,3	96,2	84,4	77,0	71,3	66,8	63,2	60,7
25	88,0	88,0	84,4	77,0	70,1	63,7	57,3	54,2	88,0	88,0	84,4	77,0	70,1	63,7	57,3	54,2
32	99,3	96,2	84,4	77,0	71,3	66,8	63,2	60,7	99,3	96,2	84,4	77,0	71,3	66,8	63,2	60,2
40	88,0	88,0	84,4	77,0	70,1	63,7	57,3	54,2	72,5	72,5	72,5	69,0	65,5	53,1	43,6	37,7
50	99,3	96,2	84,4	77,0	71,3	66,8	63,2	60,7	77,7	77,7	77,7	73,9	70,2	56,9	46,7	40,4
65	80,0	80,0	80,0	77,0	71,3	66,8	63,2	60,7	62,5	62,5	62,5	59,5	56,4	45,8	37,6	32,5
80	48,0	48,0	48,0	48,0	48,0	48,0	48,0	44,5	36,6	36,6	36,6	34,8	33,0	26,8	22,0	19,0

Limitation for SFC-sliding discs: 300°C

Application limits for GS3 valves made out of carbon steel

The actual maximum permissible operating pressure of the valve results from the minimum value of the pressure tables, the limitation by the pressure rating, the category according to DGRL 2014/68/EU and the application limits listed here. These pressures must not be exceeded for GS valves of the GS3 series made of carbon steel, even if the tensile force of the actuator would allow this.

PN16 + PN25

DN	Movable sealing disc carbon or SFC max. admissible pressures for GS3-valves in carbon steel						Movable sealing disc STN2, STN3 or hard metal max. admissible pressures for GS3-valves in carbon steel					
	100°C	150°C	200°C	250°C	300°C	350°C	100°C	150°C	200°C	250°C	300°C	350°C
200 (max PN 25)	16	16	15	13	12	11	8	7	6	5	4	3
250 (max PN 25)	10	9	9	8	7	6	5,7	5,4	5,1	4,1	3,4	2,9

Limitation for SFC-sliding discs: 300°C

PN40

DN	Movable sealing disc carbon or SFC max. admissible pressures for GS3-valves in carbon steel						Movable sealing disc STN2, STN3 or hard metal max. admissible pressures for GS3-valves in carbon steel					
	100°C	150°C	200°C	250°C	300°C	350°C	100°C	150°C	200°C	250°C	300°C	350°C
15-50	40	40	40	40	40	40	40	40	40	40	40	40
65	40	40	40	40	40	40	40	40	40	40	37	32
80	40	40	40	40	40	40	36	34	33	26	22	19
100	33	33	33	33	33	33	33	31	30	24	20	17
125	23	23	23	23	23	23	22	21	19	16	13	11
150	16	16	16	16	16	16	16	15	14	11	9	8

Limitation for SFC-sliding discs: 300°C

PN100

DN	Movable sealing disc carbon or SFC max. admissible pressures for GS3-valves in carbon steel						Movable sealing disc STN2, STN3 or hard metal max. admissible pressures for GS3-valves in carbon steel					
	100°C	150°C	200°C	250°C	300°C	350°C	100°C	150°C	200°C	250°C	300°C	350°C
15 - 20	100	100	100	100	100	100	100	100	100	100	100	100
25	100	100	100	100	94	87	100	100	100	100	94	87
32	100	100	100	100	100	99	100	100	100	84	69	60
40	100	100	100	100	94	87	72	69	65	53	43	37
50	100	100	100	100	100	94	77	73	70	56	46	40
65	80	80	80	80	80	76	62	59	56	45	37	32
80	48	48	48	48	48	44	36	34	33	26	22	19

Limitation for SFC-sliding discs: 300°C

ANSI150

DN	Movable sealing disc carbon or SFC max. admissible pressures for GS3-valves in carbon steel								Movable sealing disc STN2, STN3 or hard metal max. admissible pressures for GS3-valves in carbon steel							
	38°C	50°C	100°C	150°C	200°C	250°C	300°C	350°C	38°C	50°C	100°C	150°C	200°C	250°C	300°C	350°C
15-125	19,6	19,2	17,7	15,8	13,8	12,1	10,2	8,4	19,6	19,2	17,7	15,8	13,8	12,1	10,2	8,4
150	16,0	16,0	16,0	15,8	13,8	12,1	10,2	8,4	16,2	16,2	16,2	15,4	13,8	11,8	9,7	8,0
200	16,0	16,0	16,0	15,8	13,8	12,1	10,2	8,4	10,5	10,0	8,3	7,6	6,9	5,5	4,5	3,9
250	10,5	10,5	10,5	9,9	9,4	8,4	7,4	6,0	5,7	5,7	5,7	5,4	5,1	4,1	3,4	2,6

Limitation for SFC-sliding discs: 300°C

ANSI300

DN	Movable sealing disc carbon or SFC max. admissible pressures for GS3-valves in carbon steel								Movable sealing disc STN2, STN3 or hard metal max. admissible pressures for GS3-valves in carbon steel							
	38°C	50°C	100°C	150°C	200°C	250°C	300°C	350°C	38°C	50°C	100°C	150°C	200°C	250°C	300°C	350°C
15-50	51,1	50,1	46,6	45,1	43,8	41,9	39,8	37,6	51,1	50,1	46,6	45,1	43,8	41,9	39,8	37,6
65	51,1	50,1	46,6	45,1	43,8	41,9	39,8	37,6	41,7	41,7	41,7	39,7	37,6	33,5	37,6	33,0
80	48,0	48,0	46,6	45,1	43,8	41,9	39,8	37,6	36,6	36,6	36,6	34,8	33,0	26,8	22,0	19,0
100	33,0	33,0	33,0	33,0	33,0	33,0	33,0	33,0	33,0	33,0	33,0	31,7	30,1	24,4	20,0	17,5
125	23,0	23,0	23,0	23,0	23,0	23,0	23,0	23,0	22,1	22,1	22,1	21,0	19,9	16,1	13,2	11,5
150	16,0	16,0	16,0	16,0	16,0	16,0	16,0	16,0	16,0	16,0	16,0	15,4	14,6	11,8	9,7	8,4
200	16,0	16,0	16,0	14,8	13,7	12,1	10,2	8,4	10,5	10,0	8,3	7,6	6,9	5,5	4,5	3,9

Limitation for SFC-sliding discs: 300°C

ANSI600

DN	Movable sealing disc carbon or SFC max. admissible pressures for GS3-valves in carbon steel								Movable sealing disc STN2, STN3 or hard metal max. admissible pressures for GS3-valves in carbon steel							
	38°C	50°C	100°C	150°C	200°C	250°C	300°C	350°C	38°C	50°C	100°C	150°C	200°C	250°C	300°C	350°C
15-25	102,1	100,2	93,2	90,2	87,6	83,9	79,6	75,1	102,1	100,2	93,2	90,2	87,6	83,9	79,6	75,1
32	102,1	100,2	93,2	90,2	87,6	83,9	79,6	75,1	102,1	100,2	93,2	90,2	87,6	83,9	69,6	60,0
40	100,0	100,0	93,2	90,2	87,6	83,9	79,6	75,1	72,5	72,5	72,5	69,0	65,5	53,1	43,6	37,0
50	100,0	100,0	93,2	90,2	87,6	83,9	79,6	75,1	77,7	77,7	77,7	73,9	70,2	56,9	46,7	40,0
65	80,0	80,0	80,0	80,0	80,0	80,0	79,6	75,1	62,5	62,5	62,5	59,5	56,4	45,8	37,6	32,0
80	48,0	48,0	48,0	48,0	48,0	48,0	48,0	44,0	36,6	36,6	36,6	36,8	33,0	26,8	22,0	19,0

Limitation for SFC-sliding discs: 300°C

Sliding Gate Valve 8021-GS3

with integrated positioner Type 8049

Dimensions and Weights wafer-type construction

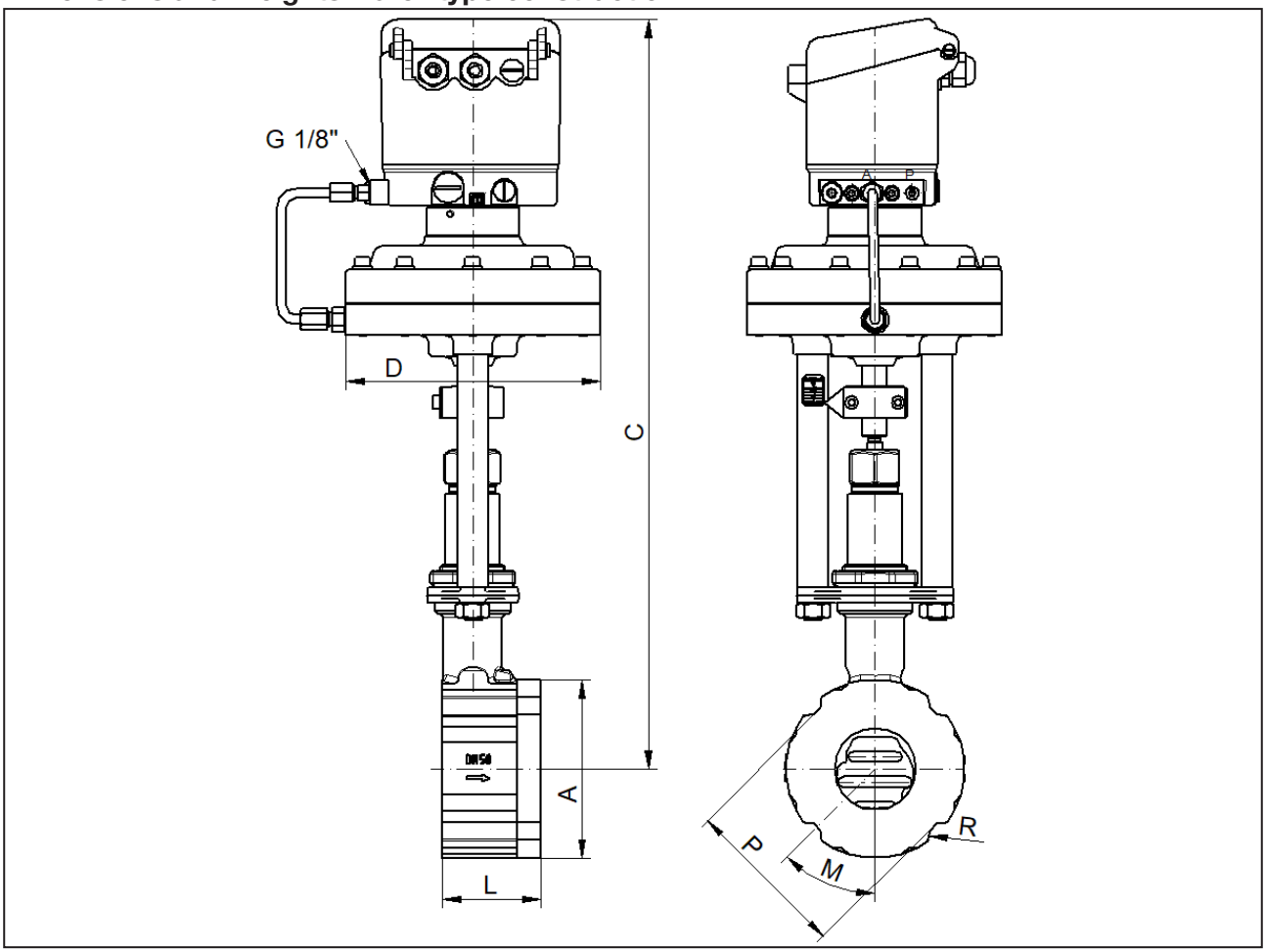

DN	ØA	Actuator D125			Actuator D250			Actuator D500			PN 16			PN 40		
		C	ØD	Weight kg	C	ØD	Weight kg	C	ØD	Weight kg	P	M	no of bolt cutouts	P	M	no of bolt cutouts
15	64	460	165	8	510	222	10	510	222	13,5	---	---	---	53	45	4
20	72	465	165	7,8	515	222	11,3	515	222	14,8	---	---	---	63	45	4
25	82	470	165	8,4	520	222	11,7	520	222	15,2	---	---	---	73	45	4
32	89	475	165	8,6	525	222	12	525	222	15,3	---	---	---	83	45	4
40	99	480	165	9,1	530	222	12,4	530	222	15,8	---	---	---	94	45	4
50	116	490	165	10,4	540	222	13,8	540	222	17,3	---	---	---	106	45	4
65	138	500	165	12,2	550	222	15,7	550	222	19,1	---	---	---	129	22,5	8
80	153	510	165	13,4	560	222	16,8	560	222	20,5	---	---	---	144	22,5	8
100	184	520	165	16,5	570	222	19,9	570	222	23,2	---	---	---	164	22,5	8
125	212	535	165	19,8	585	222	23,3	585	222	26,6	---	---	---	194	22,5	8
150	242	550	165	23	600	222	27	600	222	30,1	---	---	---	220	22,5	8
200	302	580	165	34	630	222	38,2	630	222	41,5	274	15	12	---	---	---
250	360	605	165	45,8	655	222	49,3	655	222	45,8	329	15	12	---	---	---

DN	PN 100			ANSI 150			ANSI 300			ANSI 600			R	L	Stroke
	P	M	no of bolt cutouts	P	M	no of bolt cutouts	P	M	no of bolt cutouts	P	M	no of bolt cutouts			
15	63	45	4	48,8	45	4	53	45	4	53	45	4	8	56	6
20	72	0	0	58,2	45	4	68	45	4	68	45	4	10	56	6
25	82	0	0	67,6	45	4	73	45	4	73	45	4	10	56	6
32	89	0	0	77	45	4	83	45	4	83	45	4	10	56	6
40	99	0	0	87	45	4	94	45	4	94	45	4	10	56	6
50	115	45	4	106	45	4	112	22,5	8	112	22,5	8	10	64	8
65	138	0	0	125	45	4	129	22,5	8	129	22,5	8	10	68	8
80	150	22,5	8	138	45	4	150	22,5	8	150	22,5	8	10	70	8
100	---	---	---	176	22,5	8	182	22,5	8	---	---	---	10	75	8,5
125	---	---	---	194	22,5	8	212	---	0	---	---	---	16	80	8,5
150	---	---	---	220	22,5	8	242	---	0	---	---	---	16	80	8,5
200	---	---	---	280	22,5	8	---	---	---	---	---	---	16	93	8,5
250	---	---	---	338	15	12	---	---	---	---	---	---	16	96	8,5

Dimensions in mm

Dimensions and Weights with threaded connection

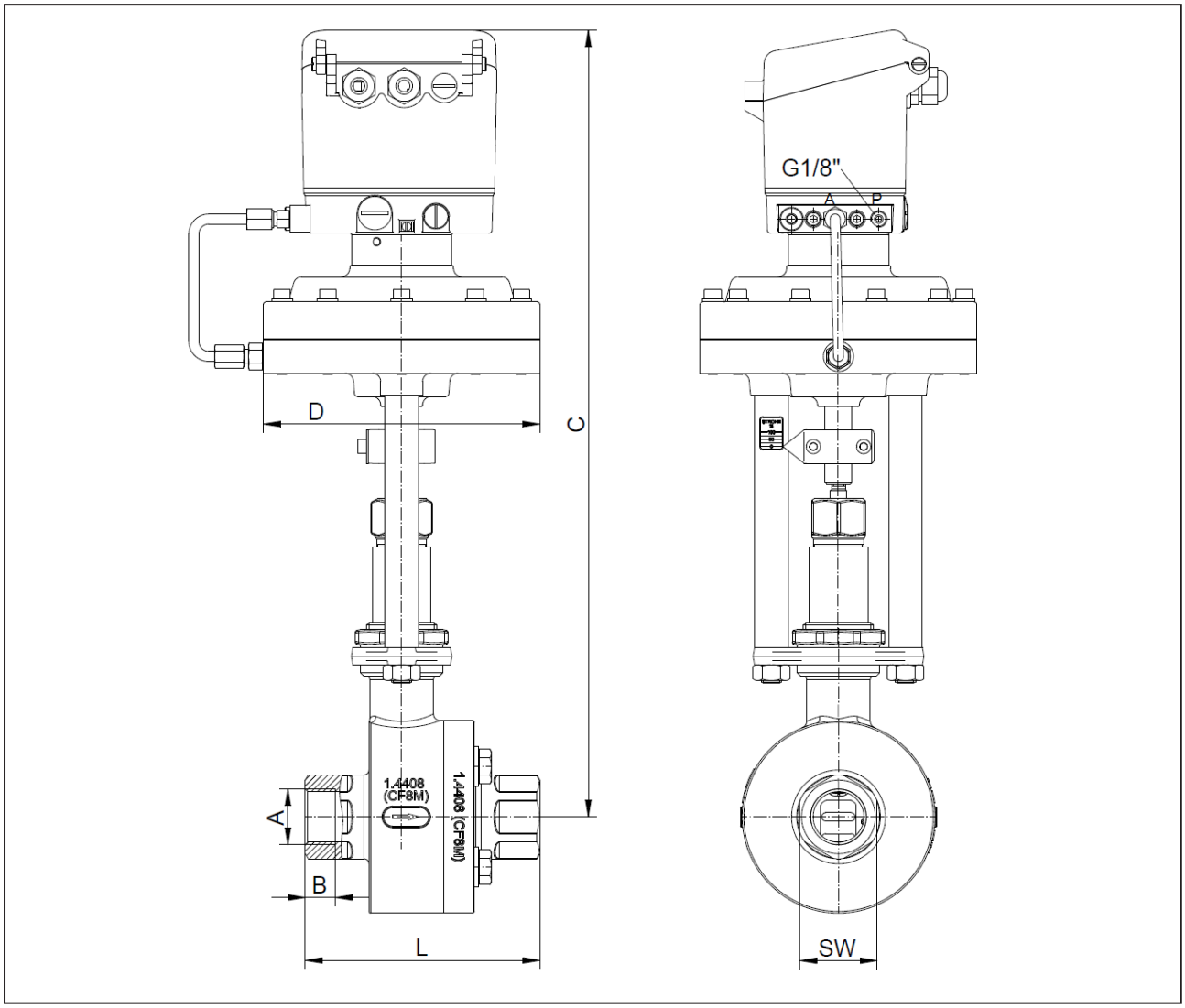

DN	A (G / NPT)	B		C	øD for actuator		L	SW	Stroke	Weight (kg) for actuator	
		G	NPT		D125	D250				D125	D250
15	1/2“	15	13,6	460	165	222	127	30	6	9,8	12
20	3/4“	15	14,1	465	165	222	127	38	6	10,7	12,9
25	1“	18	16,8	470	165	222	140	46	6	13,3	15,5
32	1 1/4“	18	17,3	475	165	222	140	56	6	14,3	16,5
40	1 1/2“	18	17,3	480	165	222	152	64	6	15,6	17,8
50	2“	18	17,7	490	165	222	152	74	8	18,3	20,5

Dimensions in mm

Sliding Gate Valve 8021-GS3

Enquiry sheet for sliding gate valves

Valve dimensioning

In order to be able to dimension a valve for a quotation, at least the following data must be known:

1. Medium

(Designation, composition and aggregate state)

2. Operating data

		minimal	normal	maximum	units
Input pressure	P1				
Output pressure	P2				
Temperature	T1				
Flow rate	Q				

3. Valve function

☐ Control valve ☐ Stop valve

4. Type of actuator

☐ Hand operated ☐ Pneumatically operated ☐ Electrically operated

Control pressure ..... bar Voltage V

☐ Spring opens (NO) ☐ Spring closes (NC)

5. Accessory

☐ Limit switch ..... Piece ☐ Pilot valve V

6. Other requests