Angle Seat Motor Valve with Flanges, compact 7231

DN 15 up to DN80

Motor valve for on/off- and modulating operation for neutral and aggressive media.

- Compact design
- Self calibration
- Unaffected by lightly contaminated media
- For temperatures from -30 °C up to +200 °C
- Working pressure up to 40 bar
- Versatile actuator options
- Actuators with control function also available with safety position



Technical Information Valve

Body material	Stainless steel 1.4408
Nominal size	DN 15 up to DN 65
Connections	flange acc. DIN EN 1092-1 flange acc. ASME B16.5: ANSI #150, ANSI #300
Nominal pressure	PN 40 / ANSI #150 / ANSI #300
Media temperature	-30 °C up to +200 °C
ambient temperature	-10°C up to +60°C
Viscosity of the fluid	max. 600 mm²/s (600 cSt)
Vacuum	maximum 0,001 bar abs
Operating pressure packing underneath	max. 12 bar / 175 psig
Packing leakage	tested according to TA-Luft as defined in DIN EN ISO 15848-1 and VDI 2440
Body dimensions	L acc. DIN EN 558-92 (old: DIN 3202-F3)

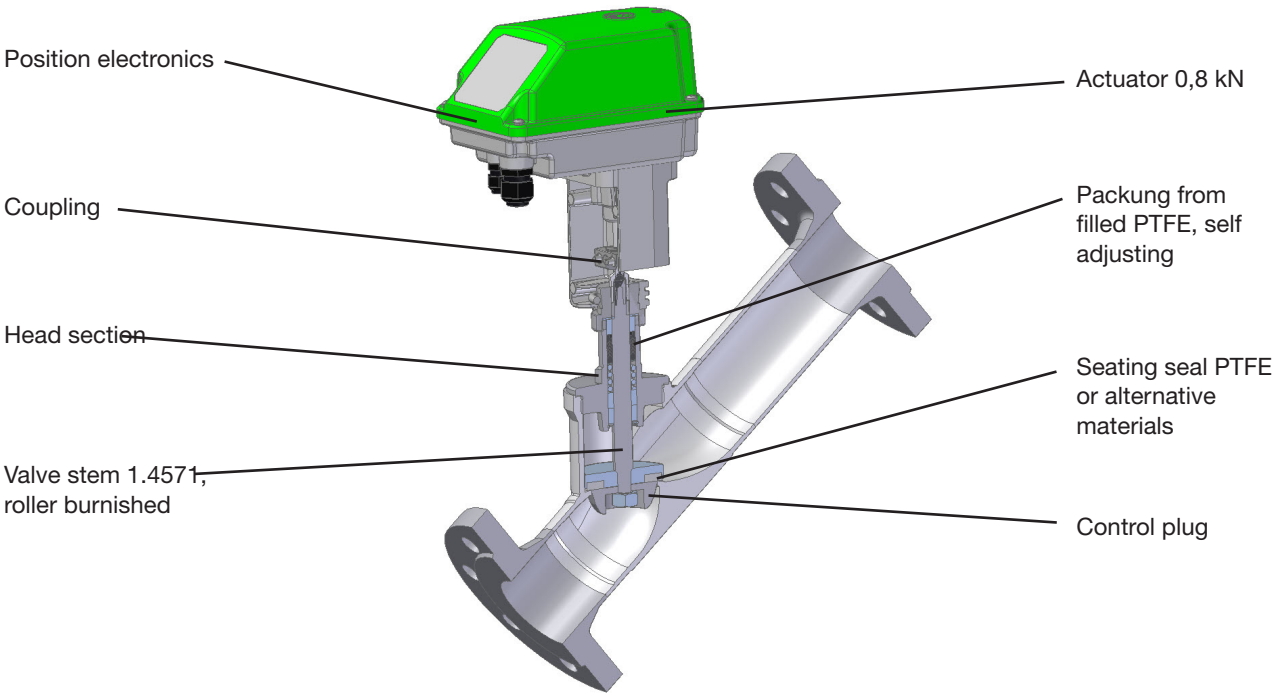

Schubert & Salzer Control Systems GmbH, Bunsenstr. 38, 85053 Ingolstadt, Tel: +49 (0)841-9654 0, Fax: +49 (0)841 9654 590
info.cs@schubert-salzer.com, www.schubert-salzer.com

Angle Seat Motor Valve with Flanges, compact 7231 DN 15 up to DN80

Technical Information CA-Actuator

Function	Control				On/Off	
Motor type	CA24C	CA260C	CA24C-R	CA260C-R	CA24	CA260
Mains connection	24 V AC/DC	100-240 V AC	24 V AC/DC	100-240 V AC	24 V AC/DC	100-240 V AC
Set point range	(0)2-10 V / (0)4-20 mA				3-point**	
Mains frequency	50/60 Hz				50/60 Hz	
Feedback	(0)2-10 V / (0)4-20 mA				optional	
Dead band	±0.6 % of the entire stroke				-	
Repeatability	±0.3 % of the entire stroke				-	
Limit switch	2				optional	
Potentiometer feedback	-				optional	
Max. switching capacity	24 V AC/DC 200 mA				250 V AC/DC 1 A	
Actuating speed	1.5 / 2 / 3 s/mm (Standard: 2 s/mm)				2 or 3 s/mm (Standard: 3 s/mm)	
Safety functions	Monitoring of tensile force, set point, temperature of the electronics, etc.				Tensile force monitoring	
Diagnostic functions	Storage of motor and total operating time, temperature and directional classes, etc.				-	
Fail Safe position	-	-	freely adjustable		-	
Load	500 Ω for current set point / 95 kΩ for voltage set point				-	
Max. power consumption	13 W	12 W	13 W	12 W	13 W	12 W
Input heating resistor	10 W					
Starting current	6 A	2,5 A	6 A	2,5 A	6 A	2,5 A
Actuating power	800 N					
Protection class (EN 60529)	IP 65***					
Adm. Ambient temperature	-10 °C to +60 °C					
Duty cycle	Storage of motor and total operating time, temperature and directional classes, etc.					

*: for control with volt-signal split range adjustments are possible
**: Minimum on-time 200 ms
*** Dustproof, protection against water jets from any angle

Wiring diagrams of the actuators can be found in the manual.

Admissible Differential Pressures

Nominal size	p max [bar]									
	DN15		DN20		DN25		DN32		DN40	
	On/off	Control	On/off	Control	On/off	Control	On/off	Control	On/off	Control
Stainless steel body	40	16	20	16	12	12	7	7	4,8	4,8
Body stainless steel pressure balanced	-	-	-	-	-	-	40	16	25	16

Nominal size	p max [bar]					
	DN50		DN65		DN80	
	On/off	Control	On/off	Control	On/off	Control
Stainless steel body	2,8	2,8	-	-	-	-
Body stainless steel pressure balanced	25	16	16	16	14	14

Kvs-Values (Stroke)

Characteristic	linear								equal percentage							
DN	15	20	25	32	40	50	65	80	15	20	25	32	40	50	65	80
100 %	3,8 (9,2)	8,8 (15,2)	14 (18,2)	20 (21,2)	27 (21,2)	39 (21,2)	42 (20)	54 (20)	3 (9,2)	6 (11,2)	10 (18,2)	16 (21,2)	25 (21,2)	31 (21,2)	33 (20)	43 (20,7)
63%	-	-	-	-	-	24 (21,2)	26 (21,2)	-	-	-	-	-	-	17 (21,2)	19 (20)	-
40 %	1,5 (9,2)	3,5 (7,2)	5,8 (10,2)	8 (11,2)	11 (11,2)	-	-	-	1,2 (9,2)	2,4 (7,2)	4 (11,2)	6 (13,2)	10 (14,2)	-	-	-
25 %	0,93 (9,2)	2,2 (7,2)	3,6 (10,2)	-	-	-	-	-	0,8 (9,2)	1,5 (7,2)	2,6 (11,2)	-	-	-	-	-
15%	-	-	-	-	-	-	-	-	0,46 (9,2)	-	-	-	-	-	-	-
10%	0,4 (9,2)	-	-	-	-	-	-	-	-	-	-	-	-	-	-	-
7,5%	-	-	-	-	-	-	-	-	0,23 (9,2)	-	-	-	-	-	-	-
On-Off	3,8 (9,2)	9 (15,2)	17 (18,2)	28 (21,2)	35 (21,2)	51 (21,2)	62 (20)	74 (20)								

Angle Seat Motor Valve with Flanges compact 7231

SCHUBERT SALZER

Ordering Number System

Article number												
7231												

Nominal size:

DN 15	015
DN 20	020
DN 25	025
DN 32	032
DN 40	040
DN 50	050
DN 65	065
DN 80	080

Item:

Valve	V
lower valve part	U
Actuator	A
seal kit	R
head piece (head section cpl. without motor)	K
valve upper part (head section cpl. with motor)	H

Motor actuator design:

compact actuator	K

Design:

flange bodied valve	2

Connection:

Angle Seat Flanged Valve acc. DIN EN 1092-1, installation lenght acc. DIN 3202 F3	9
angle seat flange bodied valve acc. ANSI 150	C

Body material:

stainless steel	2

Seating seal:

PTFE	0
FKM (Viton)	1
EPDM	2
NBR	3
PTFE with 25 % glass fibre	5

Actuator:

Control actuator CA24C, 24 V AC/DC, with pos. electronic, stanard adjustm.: control sig. 4-20 mA, feedback 4-20 mA, 2 limit switch	C
Control Actuator CA260C, 100-240 V 50/60 Hz, with pos. electronic, Standard adjustm. 4-20 mA, feedb. 4-20 mA, 2 limit switch	D
On-Of (3-point) actuator CA24, 24 V AC/DC	E
On-Off (3-point) actuator CA260, 100-240 V, 50/60 Hz	F

Control plug:

without	-
linear 100 %	1
equal percentage 100 %	2
linear 40 %	3
equal percentage 40 %	4
linear 25 %	5
equal percentage 25 %	6
control plug 15 % equal percentage	7
control plug 7.5 % equal percentage (1 GPM)	8
control plug 10 % linear	9

Safety versions:

see following positions	S
test valve (nonstandard file)	V
Lower part and console of the actuator KTL-coated	K

Safety position:

without safety position	-
Fail-Safe: normally closed at power failure	2
Fail-Safe: normaly open at power failure	3
Fail Safe: position acc. customer request	4

Stroking times:

Standard	-
3 s/mm	4
1,5 s/mm	5
4,5 s/mm	L

Angle Seat Motor Valve with Flanges compact 7231

Dimensions and Weights for CA-actuators

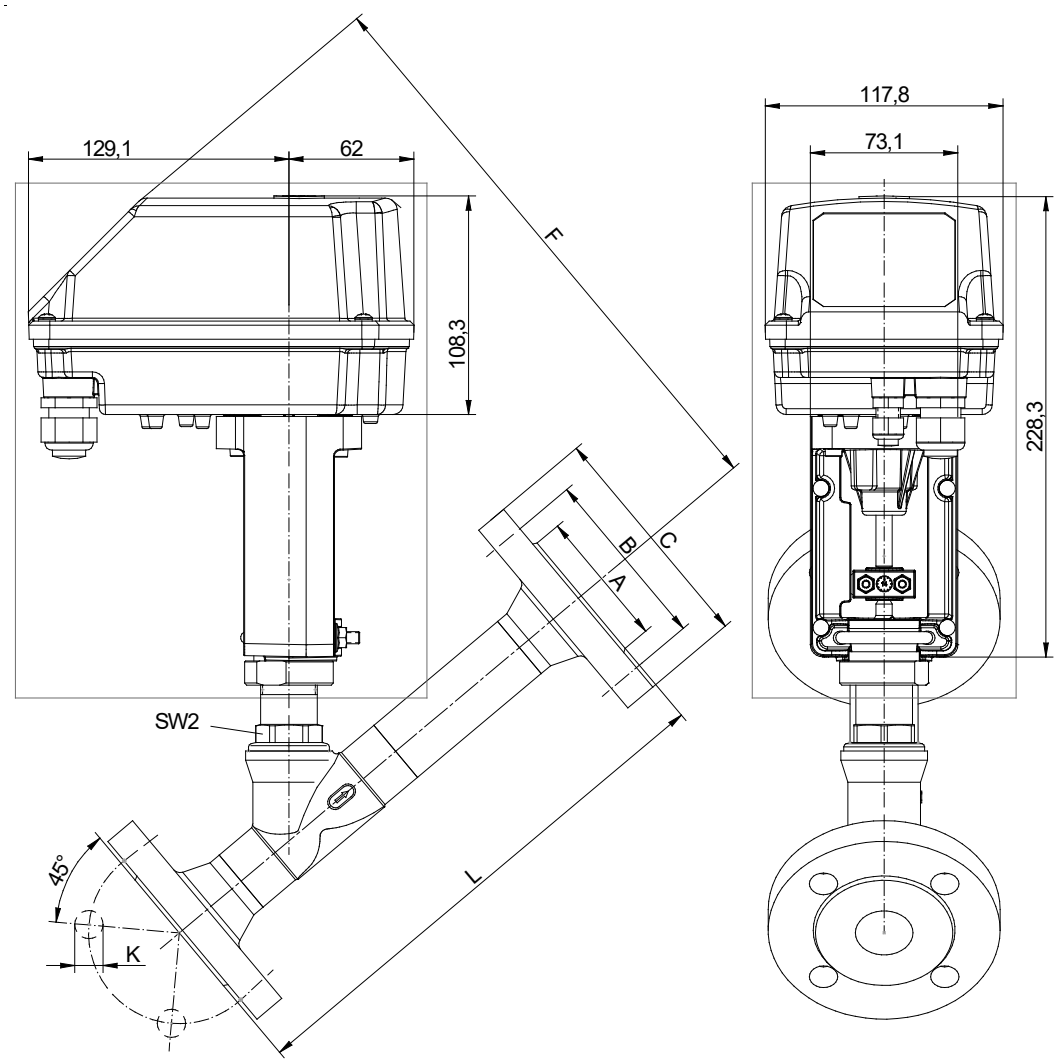

DN	PN40					ANSI150					L	F	SW2	F	SW2
	A	B	C	K	N number of bores	A	B	C	K	N number of bores				pressure balanced	
15	45	65	95	14	4	35	61	89	16	4	230	283	30	-	-
20	58	75	105	14	4	43	70	99	16	4	260	287	30	-	-
25	68	85	115	14	4	51	79	108	16	4	260	291	30	-	-
32	78	100	140	18	4	64	89	117	16	4	300	306	30	324	41
40	88	110	150	18	4	73	99	127	16	4	300	311	30	332	46
50	102	125	165	18	4	92	121	152	19	4	350	318	32	342	52
65	122	145	185	18	8	107	140	178	19	4	400	340	41	359	36
80	138	160	200	18	8	127	152	191	19	4	450	388	46	388	46

Text and pictures are not binding. We reserve the right, to alter the equipment.