Sliding Gate Valve 8028

GS3 Series - DN15 up to DN150

Compact pneumatic sliding gate valve optionally with integrated positioner for regulating or shutting off liquid and gaseous media for industrial applications



- Excellent control precision due to less friction at the actuator
- High rangeability of 40:1 linear / 80:1 equal percentage
- Control of high differential pressures with small actuators
- Without positioner also suitalbe as shut-off valve
- Space saving wafer type construction
- Intigrated positioner
- Lowest possible weight
- Quiet operation
- Fast response time
- Greatly reduced energy consumption rates due to short strokes and low actuating forces on the throttle elements
- Meets the requirements of TA-Luft 2021



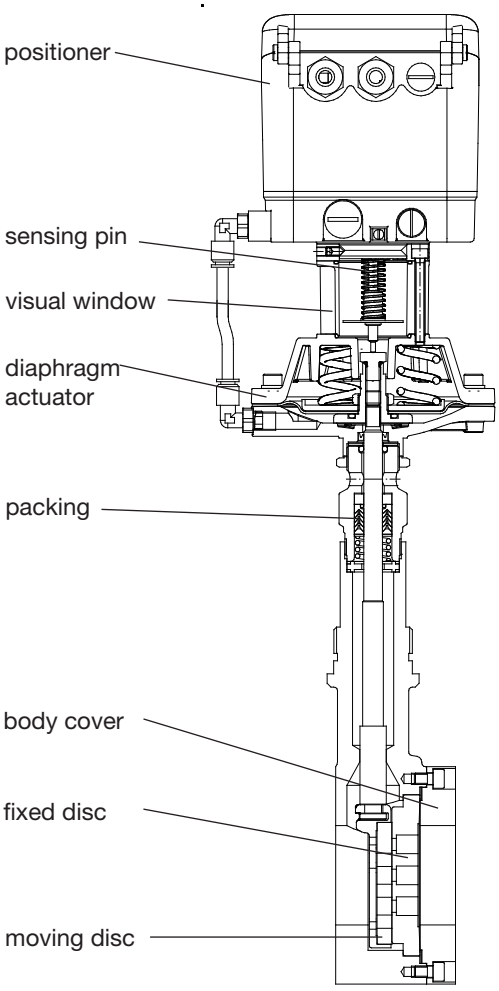

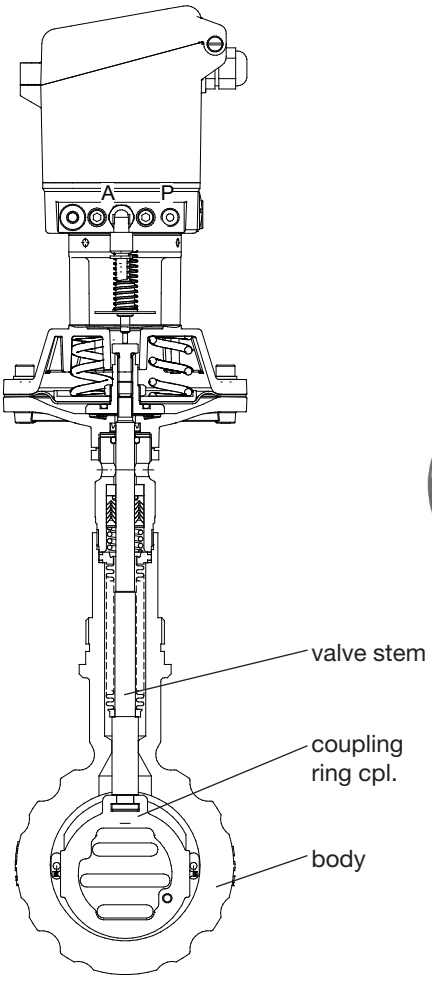

Schubert & Salzer Control Systems GmbH, Bunsenstr. 38, 85053 Ingolstadt, Tel: +49 (0)841-9654 0, Fax: +49 (0)841 9654 590
info.cs@schubert-salzer.com, www.schubert-salzer.com

Sliding Gate Valve 8028 - GS3

Technical information

Body design	wafer-type design for flanges acc. DIN EN 1092-1 Form B or ASME B16.5 RF Version with threaded connection (only PN40 in stainless steel; DN15 - DN50) further versions see data-sheet 8028-GS1		
Nominal sizes	DN 15 - 150		
Nominal pressure acc. EN 1333	PN 40 (fits also to PN 10-25)	DN 15 - DN 150	
Nominal pressure acc. ASME B16.34	ANSI 150, ANSI 300	DN 15 - DN 150	
nominal pressure acc. JIS for raised face flanges	10K 20K	DN 15 - DN 50 DN 15 - DN 40	
Fluid temperature	Versions from -60°C up to +350°C		
Ambient temperature*	digital positioner -10°C up to +75°C		
Flange gaskets (customer side)	DIN EN 1514-1 or ANSI B16.21 in the respective nominal pressure rating		
Rangeability / Characteristic digital positioner	40 : 1 linear / 80 : 1 equal percentage		
Leakage % of Kvs IEC 60534-4 EN122661	Disc pair Carbon-stainless steel <0,0001 IV-S1 E < 0,0001 IV-S1 D	Disc pair SFC <0,0005 IV-S1 F < 0,0005 IV-S1 E	Disc pair STN 2 <0,001 IV F < 0,001 IV E
Marking ATEX non electric	II 2G Ex h IIC T6…T1 X Gb II 2D Ex h IIIC 85°C…530°C X Db		
Spezific leakage rate shaft and body sealing	ISO FE-BH-CC3-SSA0-t(-40°C/+350°C)-PN40-ISO 15848-1		
Applications acc. DEP 2014/68/EU	stainless steel or carbon steel body body made of stainless steel with threaded ends		up to category II up to category I

* Please consider the limitation of use of the positioner!

Fluid temperature

Rating	PN16	PN 40	PN 100	ANSI 150	ANSI 300	ANSI 600
Body material cpl. stainless steel						
Tmin [°C]	-60	-60	-60	-29	-29	-29
Tmax [°C]	350	350	350	350	350	350
Body material carbon steel with stainless steel body cover						
Tmin [°C]	-60	-60	-10	-20	-20	-20
Tmax [°C]	350	350	350	350	350	350

Materials

	Version in stainless steel
Valve body	Stainless steel , 1.4408
Bodycover	Stainless steel, 1.4404 resp. 316L
Valve stem	Stainless steel, 1.4571
Coupling ring	Stainless steel, 1.4581
Tube for packing	Stainless steel 1.4408
Packing	PTFE filled with carbon (Spring 1.4310)
Body seal	Graphite with stainless steel inlay

	Version in C-steel
Valve body	C-steel, 1.0619
Bodycover	Stainless steel, 1.4404 resp. 316L
Valve stem	Stainless steel, 1.4571
Coupling ring	Stainless steel, 1.4581
Tube for packing	Stainless steel, 1.4408
Packing	PTFE filled with carbon (spring 1.4310)
Body seal	Graphite with stainless steel inlay

Limitations

Additionally to the limitations of the pressure rating valves with threaded connections are limited to applications of the category I of the PED 2014/68/EU.

Admissible Differential Pressure

For temperatures of 120°C (PN) or 38°C (ANSI) and above:
obey application limits !

	Sliding unit: carbon/SFC-stainless steel coatet			
	diaphragm actuator 60 cm²		diaphragm actuator 125 cm²	
DN	max. working pressure	required pilot pressure	max. working pressure	required pilot pressure
	(bar)	(bar)	(bar)	(bar)
15	102	3,3	102	2,7
20	91	3,3	102	2,7
25	76	3,3	88	2,7
32	62	3,5	88	2,8
40	47	3,9	67	3,1
50	31	4,6	44	3,8
65	26	4,7	37	3,9
80	16,5	5,0	23	4,0
100	10,5	5,2	15	4,2
125	7,2	5,3	10	4,3
150	5,3	5,4	7,6	4,3

	Sliding unit: STN2			
	diaphragm actuator 60 cm²		diaphragm actuator 125 cm²	
DN	max. working pressure	required pilot pressure	max. working pressure	required pilot pressure
	(bar)	(bar)	(bar)	(bar)
15	74	3,3	102	2,7
20	57	3,6	81	2,9
25	42	4,0	60	3,2
32	31	4,3	45	3,4
40	21	4,6	31	3,6
50	13	5,1	18,5	4,1
65	10,5	5,2	15	4,1
80	6,4	5,3	9,2	4,2
100	4,0	5,4	5,7	4,3
125	2,6	5,4	3,8	4,4
150	1,9	5,5	2,8	4,4

	Upper limits for admissible pressures in bar					
	PN16	PN40	PN100	ANSI150	ANSI 300	ANSI 600
P max. carbon steel	16	40	100	19,6	51,1	102,1
P max. stainless steel				19,0	49,6	99,3

Kvs values

Ordering code		-	A	1	B	6	2	7	C	3	4	8	5	9
DN	Charact.	100 %	63 %	40 %	25 %	20%	16 %	12 %	10 %	6,3 %	2,5 %	2 %	1%	0,4%
15	(mod.) linear	4	2,6	1,7	1,4	-	0,71	0,49	0,44	0,26	0,14	0,08	0,04	0,018
	eq. perc.	1,7	-	1,1	-	0,35	-	-	-	0,1	-	-	-	-
20	(mod.) linear	6,4	-	-	-	-	1	-	-	-	-	0,13	-	-
	eq. perc.	3	-	1,5	-	-	-	-	-	-	-	-	-	-
25	(mod.) linear	11	6,4	4	-	-	1,6	-	0,93	0,62	0,26	-	0,14	0,04
	eq. perc.	5	-	2,4	-	1,1	-	-	-	0,35	-	-	-	-
32	(mod.) linear	16	10	-	-	-	-							
	eq. perc.	8	4,7	-	-	-	-							
40	(mod.) linear	26	16	11	7	-	-							
	eq. perc.	11	8,5	-	2,75	-	-							
50	(mod.) linear	45	28	20	12	10	-							
	eq. perc.	19	12	-	-	-	3							
65	(mod.) linear	52	35	-	15									
	eq. perc.	30	19	-	8									
80	(mod.) linear	92	58	40										
	eq.perc.	48	35	-										
100	(mod.) linear	154	95	62										
	eq.perc.	77	48	-										
125	(mod.) linear	237	-	95										
	eq.perc.	116	-	-										
150	(mod.) linear	338	212	-										
	eq.perc.	147	90	-										
200	(mod.) linear	560	352	-										
	eq.perc.	284	-	-										
250	(mod.) linear	910	575											
	eq.perc.	435												

Definition of the Kvs-Value:

The Kvs-value corresponds to the volume flow of water (m^3/h), passing the valve if a pressure difference of 1 bar is applied. Kvs is the Kv-value for a fully opened valve from the series production (acc. DIN IEC 534).

	Slide pairing overview							
Moving plate	Carbon	Carbon	Carbon	Carbon	SFC	STN2	STN3	Hard metal
Fixed plate	STN2	STN1	Brass	Alloy	STN2	STN2	STN3	Hard metal
Nominal Sizes	DN15 - DN250	DN15 - DN150	DN15 - DN100	DN15, DN25, DN40, DN50, DN80	DN15 - DN250	DN15 - DN250	DN15, DN25, DN50	DN15, DN20, DN40, DN50
Fluid temperature	-60°C up to +350°C (max. 300°C with oxidising gases)	-60°C up to +300°C	-60°C up to +230°C	-60°C up to +350°C (max. 300°C with oxidising gases)	-60°C up to +300°C	-60°C up to +350°C	-60°C up to +350°C	-60°C up to +350°C
Leakage rate*	1E-6 from the Kvs value	1E-6 from the Kvs value	1E-6 from the Kvs value	1E-6 from the Kvs value	5E-6 from the Kvs value	1E-5 from the Kvs value	1E-5 from the Kvs value	1E-5 from the Kvs value
Leakage IEC 60534-4	IV-S1	IV-S1	IV-S1	IV-S1	IV-S1	IV	IV	IV
Leakage EN 12266-1	E	E	E	E	F	F	F	F
Limitation		Δ P max. 16 bar for liquids, max. 25 bar for gases	Δ P max. 10 bar for liquids, max. 40 bar for gases		Δ P max. 25 bar			
Typical applications	Gases, liquids at low differential pressures without cavitation; no pressure surges	Pure gases and liquids, no cavitation; no pressure surges	Oxygen, Pure gases and liquids, no cavitation; no pressure surges	Aggressive acids and alkalis, seawater, no cavitation; no pressure surges	Vapour, pure liquids	Gases, vapour and liquids also with cavitation	Liquids at high differential pressures	Liquids at very high differential pressures

* For DN15 with reduction less than 25 %, different leakage rates possible

Limitations

Additionally to the limitations of the pressure rating valves made of Alloy C-276 as well as valves with threaded connections are limited to applications of the category I of the PED 2014/68/EU.

		maximum admissible operating pressure in bar for application of category I of the pressure equipment directive 2014/68/EU				
		DN15	DN25	DN40	DN50	DN80*
Fluid group 1	gaseous	X	X	25	20	12,5
	liquid	X	X	50	40	25
Fluid group 2	gaseous	X	X	X	X	X
	liquid	X	X	X	X	X

X = no limitation

*DN80 is not available with threaded connections.

Application limitations for GS3 valves in stainless steel

These pressure must not be exceeded for GS-valves from the GS3-series made of stainless steel, even though the actuator power might allow it.

PN40

DN	Sliding unit: carbon/SFC - stainless steel, coated max. admissible pressures for GS3-valves in stainless steel						Sliding unit: STN2 max. admissible pressures for GS3-valves in stainless steel					
	100°C	150°C	200°C	250°C	300°C	350°C	100°C	150°C	200°C	250°C	300°C	350°C
15-32	40	40	40	40	40	40	40	40	40	40	40	40
40	40	40	40	40	40	40	40	40	40	40	40	37
50	40	40	40	40	40	40	40	40	40	40	40	40
65	40	40	40	40	40	40	40	40	40	40	37	32
80	40	40	40	40	40	40	36	34	33	26	22	19
100	33	33	33	33	33	33	32	31	30	24	20	17
125	23	23	23	23	23	23	21	21	19	16	13	11
150	16	16	16	16	16	16	15	15	14	11	9	8

Limitation for SFC-sliding discs: 300°C

PN100

DN	Sliding unit: carbon/SFC - stainless steel, coated max. admissible pressures for GS3-valves in stainless steel						Sliding unit: STN2 max. admissible pressures for GS3-valves in stainless steel					
	100°C	150°C	200°C	250°C	300°C	350°C	100°C	150°C	200°C	250°C	300°C	350°C
15	100	100	100	93	84	79	100	100	100	93	84	79
20	100	100	89	81	73	68	100	100	89	81	73	68
25	88	81	70	63	57	54	88	81	70	63	57	54
32	100	93	80	73	65	62	100	93	80	73	65	60
40	88	81	70	63	57	54	72	69	65	53	43	37
50	100	100	100	100	100	94	77	73	70	56	46	40
65	80	80	80	79	71	67	62	59	56	45	37	32
80	48	48	48	48	48	44	36	34	33	26	22	19

Limitation for SFC-sliding discs: 300°C

ANSI150

DN	Sliding unit: carbon/SFC - stainless steel, coated max. admissible pressures for GS3-valves in stainless steel								Sliding unit: STN2 max. admissible pressures for GS3-valves in stainless steel							
	38°C	50°C	100°C	150°C	200°C	250°C	300°C	350°C	38°C	50°C	100°C	150°C	200°C	250°C	300°C	350°C
15-125	19,0	18,4	16,2	14,8	13,7	12,1	10,2	8,4	19,0	18,4	16,2	14,8	13,7	12,1	10,2	8,4
150	16,0	16,0	16,0	14,8	13,7	12,1	10,2	8,4	16,2	16,2	16,2	14,8	13,7	11,8	9,7	8,4

Limitation for SFC-sliding discs: 300°C

ANSI300

DN	Sliding unit: carbon/SFC - stainless steel, coated max. admissible pressures for GS3-valves in stainless steel								Sliding unit: STN2 max. admissible pressures for GS3-valves in stainless steel							
	38°C	50°C	100°C	150°C	200°C	250°C	300°C	350°C	38°C	50°C	100°C	150°C	200°C	250°C	300°C	350°C
15-65	49,6	48,1	42,2	38,5	35,7	33,4	31,6	30,3	49,6	48,1	42,2	38,5	35,7	33,4	31,6	30,3
80	48,0	48,0	42,2	38,5	35,7	33,4	31,6	30,3	36,6	36,6	36,6	34,8	33,0	26,8	22,0	19,0
100	33,0	33,0	33,0	33,0	33,0	33,0	31,6	30,3	33,0	33,0	33,0	31,7	30,1	24,4	20,1	17,3
125	23,0	23,0	23,0	23,0	23,0	23,0	23,0	23,0	22,0	22,0	22,0	21,0	19,9	16,1	13,2	11,5
150	16,0	16,0	16,0	16,0	16,0	16,0	16,0	16,0	16,0	16,0	16,0	15,4	14,6	11,8	9,7	8,4

Limitation for SFC-sliding discs: 300°C

ANSI600

DN	Sliding unit: carbon/SFC - stainless steel, coated max. admissible pressures for GS3-valves in stainless steel								Sliding unit: STN2 max. admissible pressures for GS3-valves in stainless steel							
	38°C	50°C	100°C	150°C	200°C	250°C	300°C	350°C	38°C	50°C	100°C	150°C	200°C	250°C	300°C	350°C
15-20	99,3	96,2	84,4	77,0	71,3	66,8	63,2	60,7	99,3	96,2	84,4	77,0	71,3	66,8	63,2	60,7
25	88,0	88,0	84,4	77,0	70,1	63,7	57,3	54,2	88,0	88,0	84,4	77,0	70,1	63,7	57,3	54,2
32	99,3	96,2	84,4	77,0	71,3	66,8	63,2	60,7	99,3	96,2	84,4	77,0	71,3	66,8	63,2	60,2
40	88,0	88,0	84,4	77,0	70,1	63,7	57,3	54,2	72,5	72,5	72,5	69,0	65,5	53,1	43,6	37,7
50	99,3	96,2	84,4	77,0	71,3	66,8	63,2	60,7	77,7	77,7	77,7	73,9	70,2	56,9	46,7	40,4
65	80,0	80,0	80,0	77,0	71,3	66,8	63,2	60,7	62,5	62,5	41,7	59,5	56,4	45,8	37,6	32,5
80	48,0	48,0	48,0	48,0	48,0	48,0	48,0	44,5	36,6	36,6	36,6	34,8	33,0	26,8	22,0	19,0

Limitation for SFC-sliding discs: 300°C

Application limitations for GS3 valves in carbon steel

These pressure must not be exceeded for GS-valves from the GS3-series made of carbon steel, even though the actuator power might allow it.

PN40

DN	Sliding unit: carbon/SFC - stainless steel, coated max. admissible pressures for GS3-valves in carbon steel						Sliding unit: STN2 max. admissible pressures for GS3-valves in carbon steel					
	100°C	150°C	200°C	250°C	300°C	350°C	100°C	150°C	200°C	250°C	300°C	350°C
15-50	40	40	40	40	40	40	40	40	40	40	40	40
65	40	40	40	40	40	40	40	40	40	40	37	32
80	40	40	40	40	40	40	36	34	33	26	22	19
100	33	33	33	33	33	33	33	31	30	24	20	17
125	23	23	23	23	23	23	22	21	19	16	13	11
150	16	16	16	16	16	16	16	15	14	11	9	8

Limitation for SFC-sliding discs: 300°C

PN100

DN	Sliding unit: carbon/SFC - stainless steel, coated max. admissible pressures for GS3-valves in carbon steel						Sliding unit: STN2 max. admissible pressures for GS3-valves in carbon steel					
	100°C	150°C	200°C	250°C	300°C	350°C	100°C	150°C	200°C	250°C	300°C	350°C
15 - 20	100	100	100	100	100	100	100	100	100	100	100	100
25	100	100	100	100	94	87	100	100	100	100	94	87
32	100	100	100	100	100	99	100	100	100	84	69	60
40	100	100	100	100	94	87	72	69	65	53	43	37
50	100	100	100	100	100	94	77	73	70	56	46	40
65	80	80	80	80	80	76	62	59	56	45	37	32
80	48	48	48	48	48	44	36	34	33	26	22	19

Limitation for SFC-sliding discs: 300°C

ANSI150

DN	Sliding unit: carbon/SFC - stainless steel, coated max. admissible pressures for GS3-valves in carbon steel								Sliding unit: STN2 max. admissible pressures for GS3-valves in carbon steel							
	38°C	50°C	100°C	150°C	200°C	250°C	300°C	350°C	38°C	50°C	100°C	150°C	200°C	250°C	300°C	350°C
15-125	19,6	19,2	17,7	15,8	13,8	12,1	10,2	8,4	19,6	19,2	17,7	15,8	13,8	12,1	10,2	8,4
150	16,0	16,0	16,0	15,8	13,8	12,1	10,2	8,4	16,2	16,2	16,2	15,4	13,8	11,8	9,7	8,0

Limitation for SFC-sliding discs: 300°C

ANSI300

DN	Sliding unit: carbon/SFC - stainless steel, coated max. admissible pressures for GS3-valves in carbon steel								Sliding unit: STN2 max. admissible pressures for GS3-valves in carbon steel							
	38°C	50°C	100°C	150°C	200°C	250°C	300°C	350°C	38°C	50°C	100°C	150°C	200°C	250°C	300°C	350°C
15-50	51,1	50,1	46,6	45,1	43,8	41,9	39,8	37,6	51,1	50,1	46,6	45,1	43,8	41,9	39,8	37,6
65	51,1	50,1	46,6	45,1	43,8	41,9	39,8	37,6	41,7	41,7	41,7	39,7	37,6	33,5	37,6	33,0
80	48,0	48,0	46,6	45,1	43,8	41,9	39,8	37,6	36,6	36,6	36,6	34,8	33,0	26,8	22,0	19,0
100	33,0	33,0	33,0	33,0	33,0	33,0	33,0	33,0	33,0	33,0	33,0	31,7	30,1	24,4	20,0	17,5
125	23,0	23,0	23,0	23,0	23,0	23,0	23,0	23,0	22,1	22,1	22,1	21,0	19,9	16,1	13,2	11,5
150	16,0	16,0	16,0	16,0	16,0	16,0	16,0	16,0	16,0	16,0	16,0	15,4	14,6	11,8	9,7	8,4

Limitation for SFC-sliding discs: 300°C

ANSI600

DN	Sliding unit: carbon/SFC - stainless steel, coated max. admissible pressures for GS3-valves in carbon steel								Sliding unit: STN2 max. admissible pressures for GS3-valves in carbon steel							
	38°C	50°C	100°C	150°C	200°C	250°C	300°C	350°C	38°C	50°C	100°C	150°C	200°C	250°C	300°C	350°C
15-25	102,1	100,2	93,2	90,2	87,6	83,9	79,6	75,1	102,1	100,2	93,2	90,2	87,6	83,9	79,6	75,1
32	102,1	100,2	93,2	90,2	87,6	83,9	79,6	75,1	102,1	100,2	93,2	90,2	87,6	83,9	69,6	60,0
40	100,0	100,0	93,2	90,2	87,6	83,9	79,6	75,1	72,5	72,5	72,5	69,0	65,5	53,1	43,6	37,0
50	100,0	100,0	93,2	90,2	87,6	83,9	79,6	75,1	77,7	77,7	77,7	73,9	70,2	56,9	46,7	40,0
65	80,0	80,0	80,0	80,0	80,0	80,0	79,6	75,1	62,5	62,5	62,5	59,5	56,4	45,8	37,6	32,0
80	48,0	48,0	48,0	48,0	48,0	48,0	48,0	44,0	36,6	36,6	36,6	36,8	33,0	26,8	22,0	19,0

Limitation for SFC-sliding discs: 300°C

Dimensions and weights with digital positioner 8049 wafer-type construction

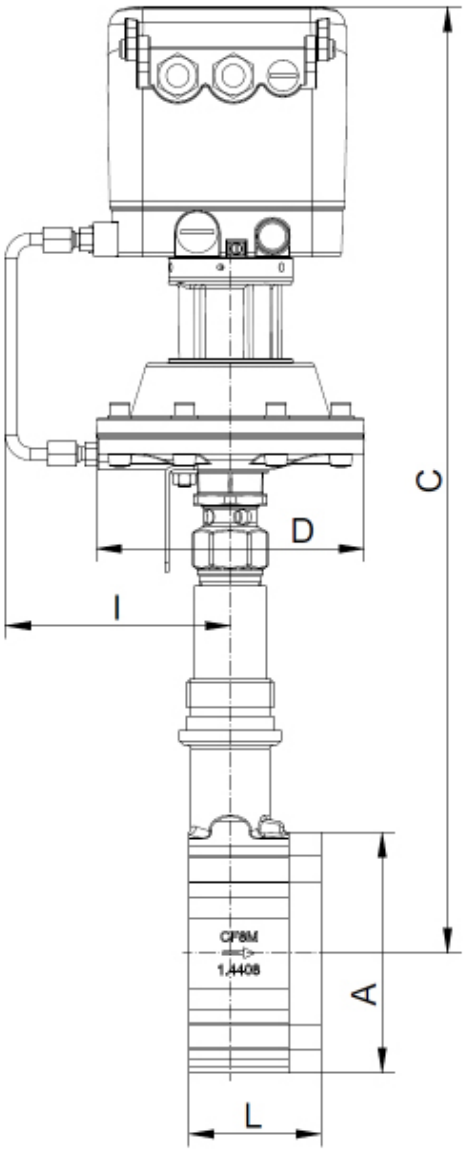

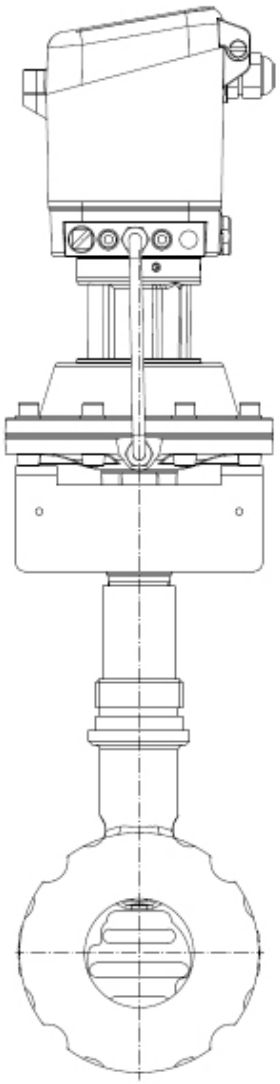

DN	A	C	60 cm²			125 cm²			L	Stroke
			D	I	Weight (kg)	D	I	Weight (kg)		H
15	64	430	130	114	4,3	165	127	5,2	56	6,25
20	72	437	130	114	4,6	165	127	5,5	56	6,25
25	82	440	130	114	4,8	165	127	5,7	56	6,25
32	89	445	130	114	4,9	165	127	5,8	56	6,25
40	99	450	130	114	5,3	165	127	6,2	56	6,25
50	116	459	130	114	6,8	165	127	7,7	64	8,25
65	138	468	130	114	8,3	165	127	9,2	68	8,25
80	153	477	130	114	9,5	165	127	10,4	70	8,25
100	184	490	130	114	12,8	165	127	13,7	75	8,75
125	212	502	130	114	17	165	127	17,9	80	8,75
150	242	520	130	114	20,7	165	127	21,6	80	8,75

dimensions in mm

Dimensions and weights, shut-off valve wafer-type construction

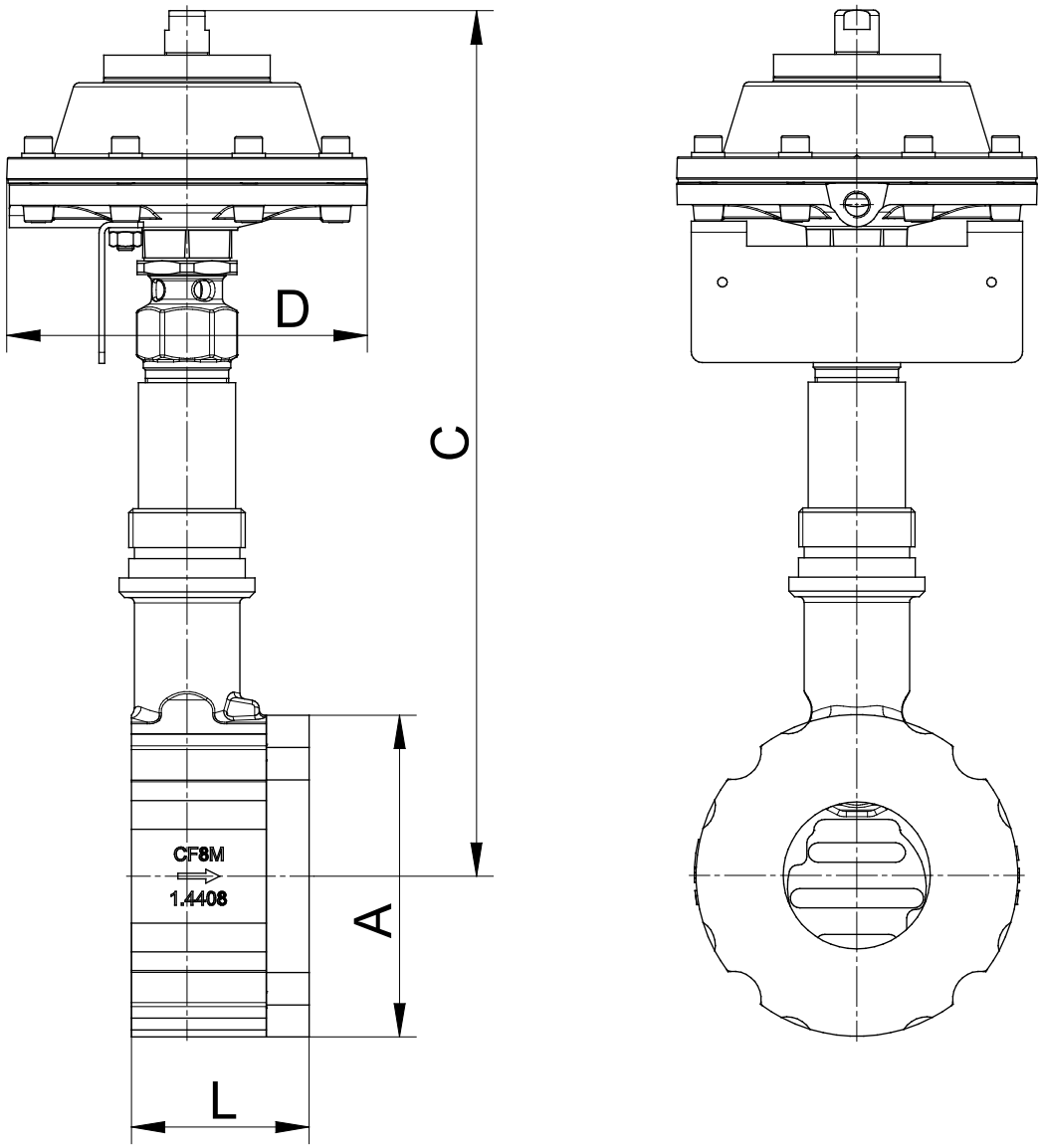

DN	A	C	60 cm²		125 cm²		L	Stroke H
			D	Weight (kg)	D	Weight (kg)		
15	64	283	130	3,3	165	4,2	56	6,25
20	72	290	130	3,6	165	4,5	56	6,25
25	82	293	130	3,8	165	4,7	56	6,25
32	89	298	130	3,9	165	4,8	56	6,25
40	99	303	130	4,3	165	5,2	56	6,25
50	116	312	130	5,8	165	6,7	64	8,25
65	138	321	130	7,3	165	8,2	68	8,25
80	153	330	130	8,5	165	9,4	70	8,25
100	184	343	130	11,8	165	12,7	75	8,75
125	212	355	130	16,0	165	16,9	80	8,75
150	242	373	130	19,7	165	20,6	80	8,75

dimensions in mm

Dimensions and weights with digital positioner 8049 with threaded connections

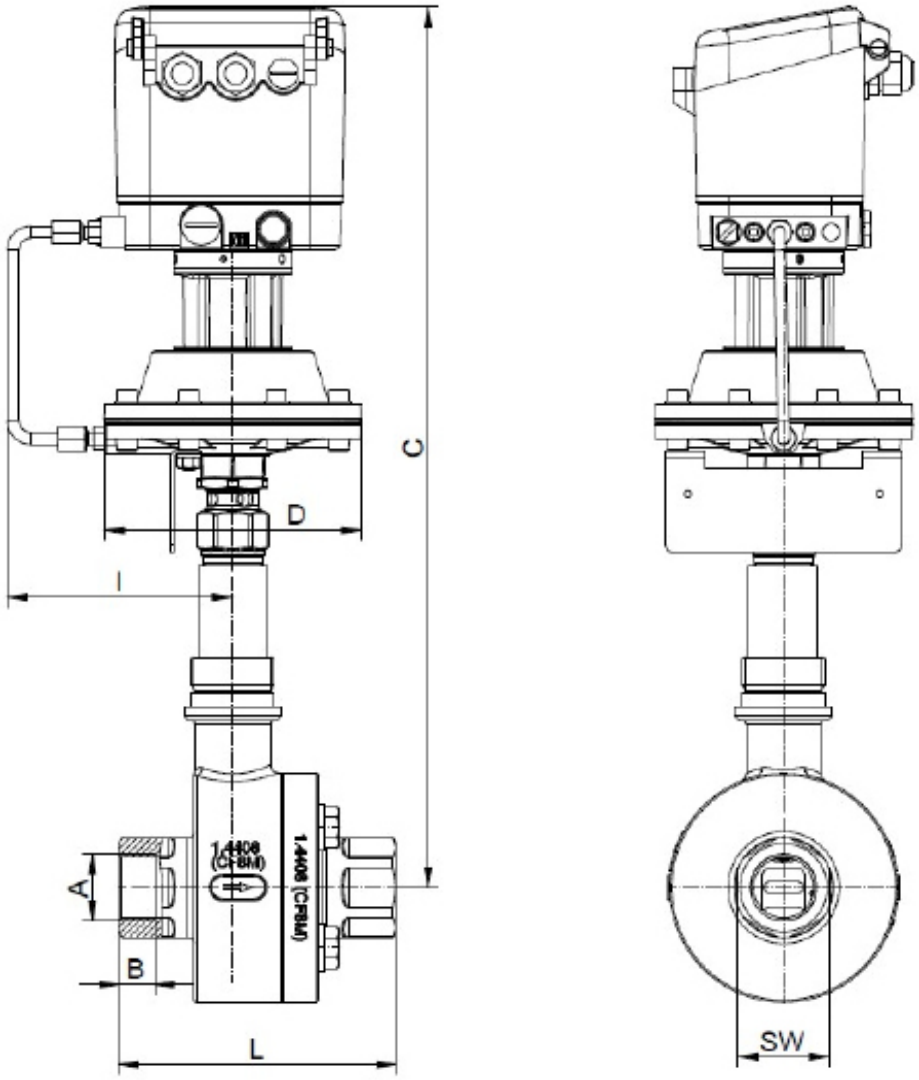

DN	A	B		C	60 cm²			125 cm²			L	SW	Stroke
	(G/NPT)	G	NPT		D	I	Weight (kg)	D	I	Weight (kg)			H
15	1/2“	15	13,6	430	130	114	6,6	165	127	7,5	127	30	6,25
20	3/4“	15	14,1	437	130	114	7,6	165	127	8,5	127	38	6,25
25	1“	18	16,8	440	130	114	10	165	127	10,9	140	46	6,25
32	1 1/4“	18	17,3	445	130	114	10,7	165	127	11,6	140	56	6,25
40	1 1/2“	18	17,3	450	130	114	12	165	127	12,9	152	64	6,25
50	2“	18	17,7	459	130	114	14,6	165	127	15,5	152	74	8,25

dimensions in mm

Dimensions and weights, shut-off valve with threaded connections

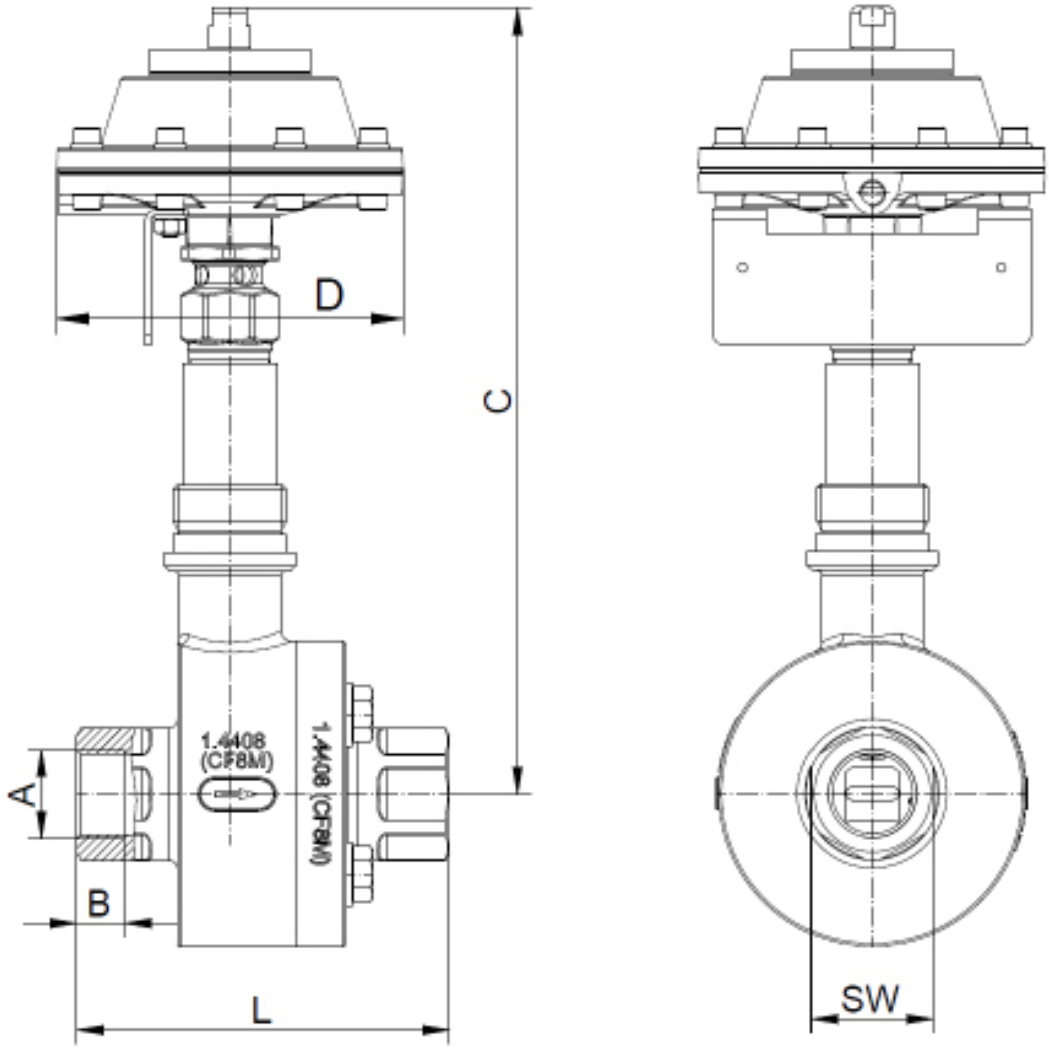

DN	A (G/NPT)	B G	B NPT	C	60 cm² D	60 cm² Weight (kg)	125 cm² D	125 cm² Weight (kg)	L	SW	Stroke H
15	1/2“	15	13,6	283	130	5,6	165	6,5	127	30	6,25
20	3/4“	15	14,1	290	130	6,6	165	7,5	127	38	6,25
25	1“	18	16,8	293	130	9,0	165	9,9	140	46	6,25
32	1 1/4“	18	17,3	298	130	9,7	165	10,6	140	56	6,25
40	1 1/2“	18	17,3	303	130	11,0	165	11,9	152	64	6,25
50	2“	18	17,7	312	130	13,6	165	14,5	152	74	8,25

dimensions in mm

Sliding Gate Valve 8028 - GS3

Enquiry sheet for sliding gate valves

Valve dimensioning

In order to be able to dimension a valve for a quotation, at least the following data must be known:

1. Medium

(Designation, composition and aggregate state)

2. Operating data

		minimal	normal	maximum	units
Input pressure	P1				
Output pressure	P2				
Temperature	T1				
Flow rate	Q				

3. Valve function

☐ Control valve ☐ Stop valve

4. Type of actuator

☐ Hand operated ☐ Pneumatically operated ☐ Electrically operated

Control pressure ..... bar Voltage V

☐ Spring opens (NO) ☐ Spring closes (NC)

5. Accessory

☐ Limit switch ..... Piece ☐ Pilot valve V

6. Other requests