Right Angle Seat Motor Valve compact 7250

DN 15 up to DN 50

Motor valve for on/off- and modulating operation for neutral and aggressive media.



- Compact design
- Self adaption
- Unaffected by lightly contaminated media
- For temperatures from -100°C up to +220°C
- Working pressure up to 40 bar
- Versatile actuator options
- Actuators with control function also available with safety positon

Technical Information Valve

Body materials	Stainless steel 1.4408
Nominal sizes	DN 15 up to DN 50
Connections:	
Pipe threads acc. ISO 228-1	DN15 - DN 50
NPT thread	DN15 - DN 50
Nominal pressure	PN 40
Media temperature	-30°C up to +200°C, opt. -100°C up to +220°C
ambient temperature	-10°C up to +60°C
Viscosity	max. 600 mm²/s (600 cSt)
Vacuum	max. 0,001 bar, abs.
Operating pressure packing underneath	max. 12 bar
Packing leakage	tested according to TA-Luft as defined in DIN EN ISO 15848-1 and VDI 2440

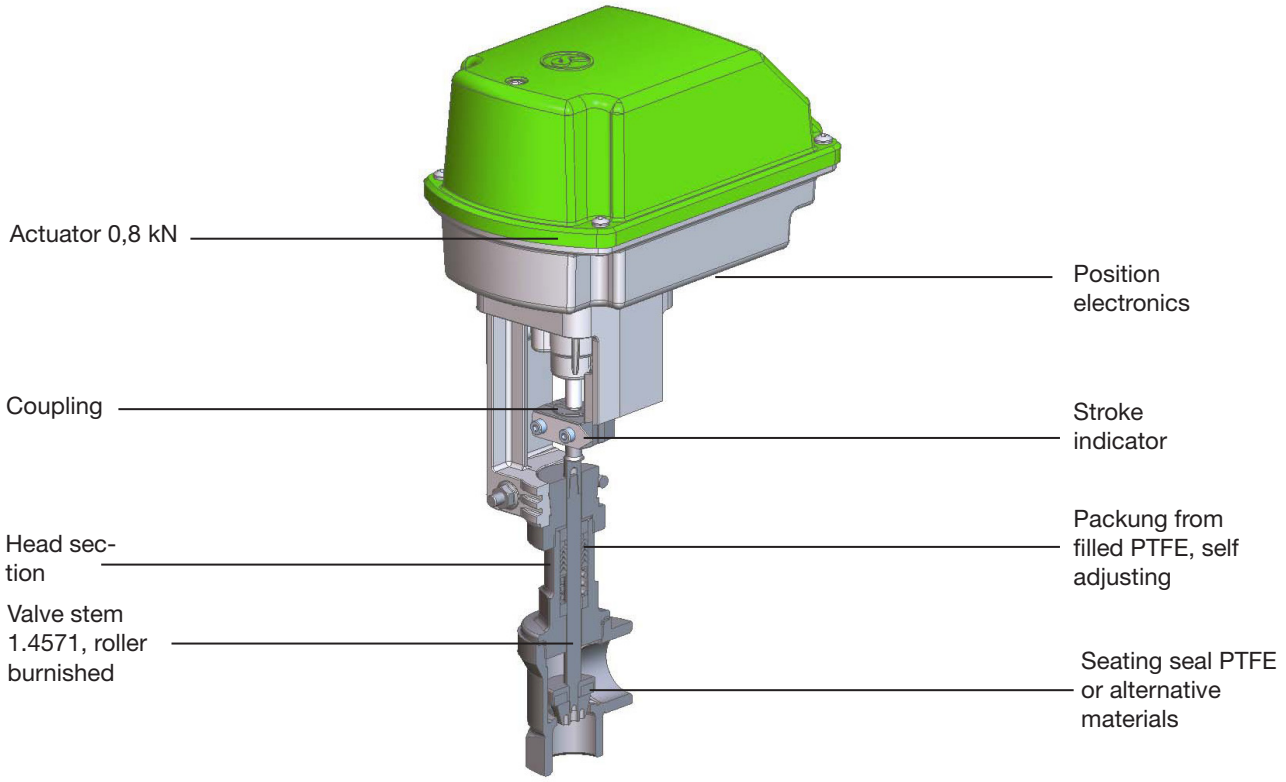

Schubert & Salzer Control Systems GmbH, Bunsenstr. 38, 85053 Ingolstadt, Tel: +49 (0)841-9654 0, Fax: +49 (0)841 9654 590
info.cs@schubert-salzer.com, www.schubert-salzer.com

Right Angle Seat Motor Valve compact 7250

Technical Information CA-Actuator

Function	Control				On/Off	
Motor type	CA24C	CA260C	CA24C-R	CA260C-R	CA24	CA260
Mains connection	24 V AC/DC	100-240 V AC	24 V AC/DC	100-240 V AC	24 V AC/DC	100-240 V AC
Set point range	(0)2-10 V / (0)4-20 mA				3-point**	
Mains frequency	50/60 Hz				50/60 Hz	
Feedback	(0)2-10 V / (0)4-20 mA				optional	
Dead band	±0.6 % of the entire stroke				-	
Repeatability	±0.3 % of the entire stroke				-	
Limit switch	2				optional	
Potentiometer feedback	-				optional	
Max. switching capacity	24 V AC/DC 200 mA				250 V AC/DC 1 A	
Actuating speed	1.5 / 2 / 3 s/mm (Standard: 2 s/mm)				2 or 3 s/mm (Standard: 3 s/mm)	
Safety functions	Monitoring of tensile force, set point, temperature of the electronics, etc.				Tensile force monitoring	
Diagnostic functions	Storage of motor and total operating time, temperature and directional classes, etc.				-	
Fail Safe position	-	-	freely adjustable		-	
Load	500 Ω for current set point / 95 kΩ for voltage set point				-	
Max. power consumption	13 W	12 W	13 W	12 W	13 W	12 W
Input heating resistor	10 W					
Starting current	6 A	2,5 A	6 A	2,5 A	6 A	2,5 A
Actuating power	800 N					
Protection class (EN 60529)	IP 65***					
Adm. Ambient temperature	-10 °C to +60 °C					
Duty cycle	Storage of motor and total operating time, temperature and directional classes, etc.					

*: for control with volt-signal split range adjustments are possible
**: Minimum on-time 200 ms
*** Dustproof, protection against water jets from any angle

Wiring diagrams of the actuators can be found in the manual.

Admissible Differential Pressures

	p max (bar)											
Nominal size	DN15		DN20		DN25		DN32		DN40		DN50	
	On/off	Control	On/off	Control	On/off	Control	On/off	Control	On/off	Control	On/off	Control
Stainless steel body	40	16	20	16	12	12	7	7	4,8	4,8	2,8	2,8

Kvs-Values (Stroke)

Characteristic	linear						equal percentage					
DN	15	20	25	32	40	50	15	20	25	32	40	50
100 %	5,2 (8,7)	10,5 (14,2)	16,5 (15,2)	25 (18,2)	33 (18,2)	40 (21,2)	4,1 (8,7)	9,3 (14,2)	12 (14,2)	16 (18,2)	22 (18,2)	-
40 %	2,1 (8,7)	4,2 (7,2)	6,6 10,2)	10 (10,2)	16 (18,2)	-	1,7 (8,7)	3,7 (7,2)	4,8 (9,2)	6,4 (10,2)	12,8 (12,2)	-
25 %	1,3 (8,7)	2,6 (7,2)	4,1 (10,2)	-	-	-	1 (8,7)	2,3 (7,2)	3 (9,2)	-	-	-
On-Off	5,5 (8,7)	10,5 (14,2)	17 (15,2)	25 (18,2)	35 (18,2)	45 (21,2)						

Dimensions and Weights for CA-actuators

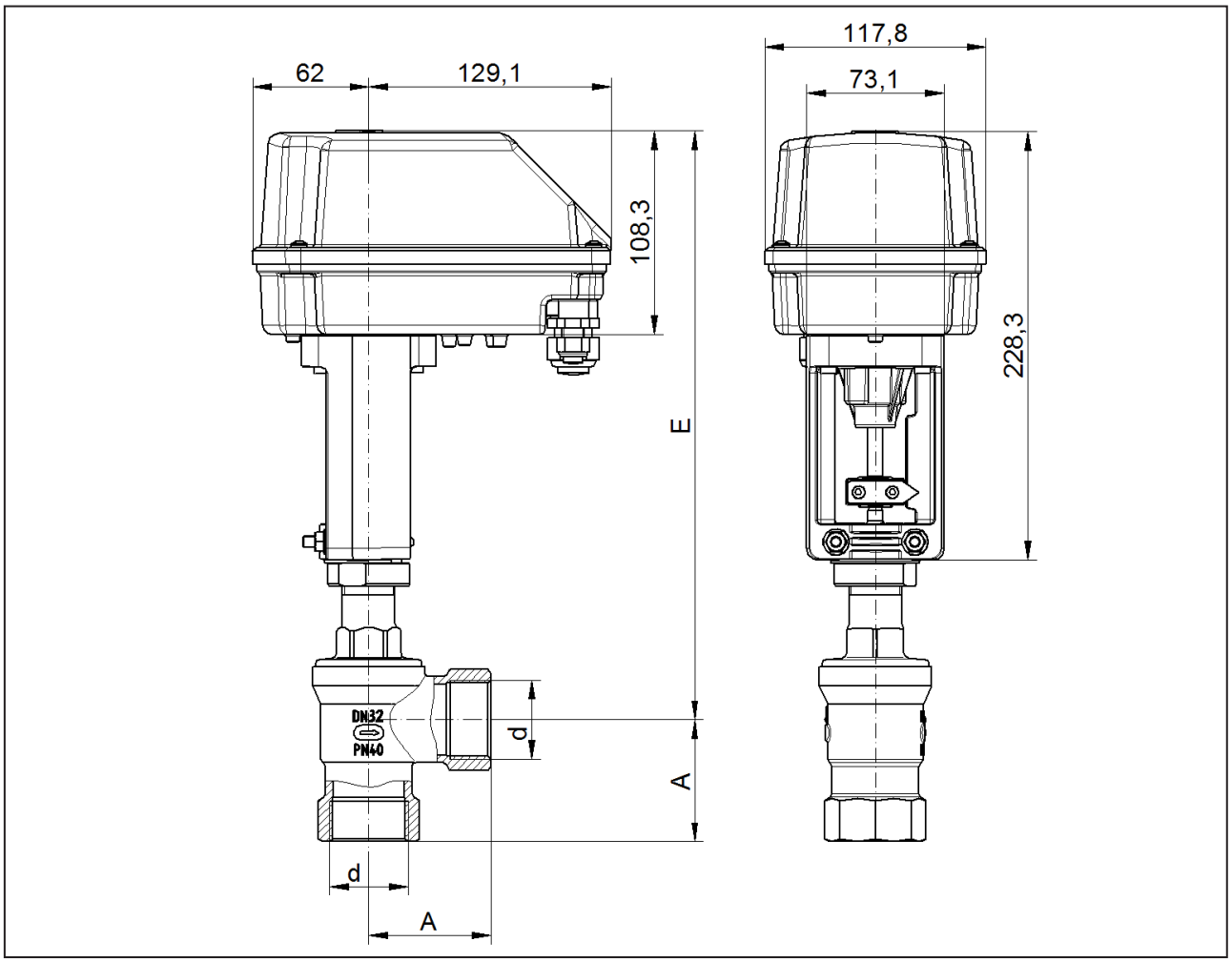

DN	d	A	E	Stroke	Weight kg
15	1/2“	41	284	9	2,4
20	3/4“	41	285	14	2,7
25	1“	41	298	18	2,8
32	1 1/4“	65	299	21	3,4
40	1 1/2“	65	302	22	3,6
50	2“	65	319	22	4,2

Dimensions in mm

Text and pictures are not binding. We reserve the right, to alter the equipment.