Sliding Gate Motor Valve 8037

Version for potentially explosive areas
GS 1 series, DN 15 up to DN 150

Sliding gate motor valve for control and switching of neutral through to highly aggressive media in process engineering, chemical industries and for plant equipment, for applications in ATEX zones 1, 2, 21 and 22.

Technical Information Valve

Design	flangeless, wafer type contrstruction dimensions acc. DIN EN 558-1 series 20 for flanges acc. DIN EN 1092-1 form B		
Nominal size	DN 15 up to DN 150		
Nominal pressure	PN 40 acc. DIN 2401 also for flanges PN10 up to PN25		
Media temperature	Carbon steel body: -10°C up to +350°C Stainless steel body: -60°C up to +350°C		
Flange gaskets (customer side)	DIN EN 1514-1 or ANSI B16.21 in the respective nominal pressure rating		
Rangeability	30 : 1		
Leakage (% of Kvs) IEC 60534-4 EN 12266-1	Disc pair Carbon-stainless steel < 0,0001 IV-S1 E	Disc pair SFC < 0,0005 IV-S1 F	Disc pair STN 2 < 0,001 IV F
Packing leakage	ISO FE - BH - CC3 - SSA0 - t (-40°C / +350 °C) - PN40 - ISO 15848-1		

*For DN15 with reduction less than 25%, different leakage rates are possible.
For Kvs values, see data sheet 8001.

Technical data of the Type 2036 actuator

Driving force	2 kN
Stroking speed	3.3 s/mm (2.5 s/mm with emergency closure)
Power supply	24 V AC/DC or 100-240 V AC
Input signal	(0) 4 - 20 mA, (0) 2 - 10 V or binary (3-point)
Feedback	(0) 4 - 20 mA or (0) 2 - 10 V
Explosion protection	II 2G Ex db eb [ib Gb] IIC T6, T5, T4 Gb
	II 2D Ex tb [ib Db] IIIC T80°C, T95°C, T130°C Db
Protection class	IP 65
Ambient temperature	-10°C ≤ Ta ≥ + 40°C (T6) / + 60°C (T4)
Operating mode	S2 30 min / S4 50% ED
Hysterese	approx. ±1,5%
Ambient	self-learning
Motor	brushless DC motor
Manual operation	by means of pressure switch (power supply required) or with handwheel as emergency actuation
Zero-voltage reset	Mechanical spring return



Technical data of the Type 2037 actuator

Driving force	1 kN	2,5 kN	5 kN
Stroking speed	2 / 3 / 6 / 9 / 12 s/mm (adjustable)		
Power supply	24 ... 230 V AC/DC (multi-range power supply unit)		
Input signal	3-point or 4 - 20 mA resp. 0 - 10 V		
Feedback	4 - 20 mA or 0 - 10 V		
Explosion protection	II 2G Ex db eb [ib Gb] IIC T6, T5, T4 Gb		
	II 2D Ex tb [ib Db] IIIC T80°C, T95°C, T130°C Db		
Protection class	IP 66		
Ambient temperature	-20...+40°C for T6 / -20...+50°C for T5		
Operating mode	S3 / 50% ED (max. 300 switching cycles / h)		
Hysterese	approx. ±1,5%		
Resolution	approx. 100 steps		
Ambient	self-learning		
Heating resistor element	16 Watt self actuating		
Motor	brushless DC motor		
Manual operation	hexagon key (top of header)		



Schubert & Salzer Control Systems GmbH, Bunsenstr. 38, 85053 Ingolstadt, Tel: +49 (0)841-9654 0, Fax: +49 (0)841 9654 590
info.cs@schubert-salzer.com, www.schubert-salzer.com

Sliding Gate Motor Valve 8037-GS1

Materials

	Version in stainless steel
Valve body	Stainless steel , 1.4408
Valve stem	Stainless steel, 1.4571
Coupling ring	Stainless steel, 1.4581
Tube for packing	Stainless steel 1.4408
Packing	PTFE filled with carbon (Spring 1.4310)

	Version in C-steel
Valve body	C-steel, 1.0619
Valve stem	Stainless steel, 1.4571
Coupling ring	Stainless steel, 1.4581
Tube for packing	Stainless steel, 1.4408
Packing	PTFE filled with carbon (spring 1.4310)

Stroking times for the complete stroke (sec.):

Operating times for full valve stroke (sec) type 2036 with spring return

Geschwindigkeit [s/mm]	3,3
DN 15 - 40	20,6
DN 50 - 80	27,2
DN 100 - 150	28,9

= Factory setting actuator type 2036 with spring return

Operating times for full valve stroke (sec) type 2036 and 2037 without spring return

Geschwindigkeit [s/mm]	1	1,3	2	3*	6*	9*	12*
DN 15 - 40	6,3	8,1	12,5	18,8	37,5	56,3	75,0
DN 50 - 80	8,3	10,7	16,5	24,8	49,5	74,3	99,0
DN 100 - 150	8,8	11,4	17,5	26,3	52,5	78,8	105,0
		= Factory setting actuator type 2036 without spring return					
				= Factory setting actuator type 2037			

*Setting only for type 2037

Admissible Differential Pressures

DN	1,0 kN	2,0 kN	2,5 kN	5,0 kN	1,0 kN	2,0 kN	2,5 kN	5,0 kN
	Maximum differential pressure (bar) Carbon material/SFC stainless steel coated pairing				Maximum differential pressure (bar) STN2 sliding pair			
15	40	40	40	40	40	40	40	40
20	40	40	40	40	40	40	40	40
25	40	40	40	40	36	40	40	40
32	40	40	40	40	26	40	40	40
40	40	40	40	40	18	27	27	27
50	26	40	40	40	11	23	29	40
65	22	40	40	40	9	19	24	37
80	14	29	37	40	5	11,5	14	22
100	9	18,5	23	23	3	7,1	9	13
125	6	12,5	16	16	2	4,7	6	8,5
150	4,5	9,5	12	16	1,5	3,5	4,5	9

Applications limits for GS1-Valves made of stainless steel

PN 40

DN	Sliding unit: carbon/SFC - stainless steel, coated max. admissible pressures for GS1-valves						Sliding unit: carbon - STN2 max. admissible pressures for GS1-valves					
	100°C	150°C	200°C	250°C	300°C	350°C	100°C	150°C	200°C	250°C	300°C	350°C
15 - 25	40	36	31	28	26	24	40	36	31	28	26	24
32	40	36	31	28	26	24	40	36	31	28	25	22
40	40	36	31	28	26	24	26	25	24	19	16	14
50	40	36	31	28	26	24	40	36	31	28	26	24
65	40	36	31	28	26	24	37	35	31	27	22	19
80	40	36	31	28	26	24	22	20	19	16	13	11
100	24	23	22	19	17	16	13	12	12	9	8	6
125	16	15	14	13	11	10	8	8	7	6	5	4
150	16	16	16	16	14	13	10	10	9	7	6	5

Limitation for SFC-sliding discs: 300°C

Actuator (Type 2036) dimensions and weights

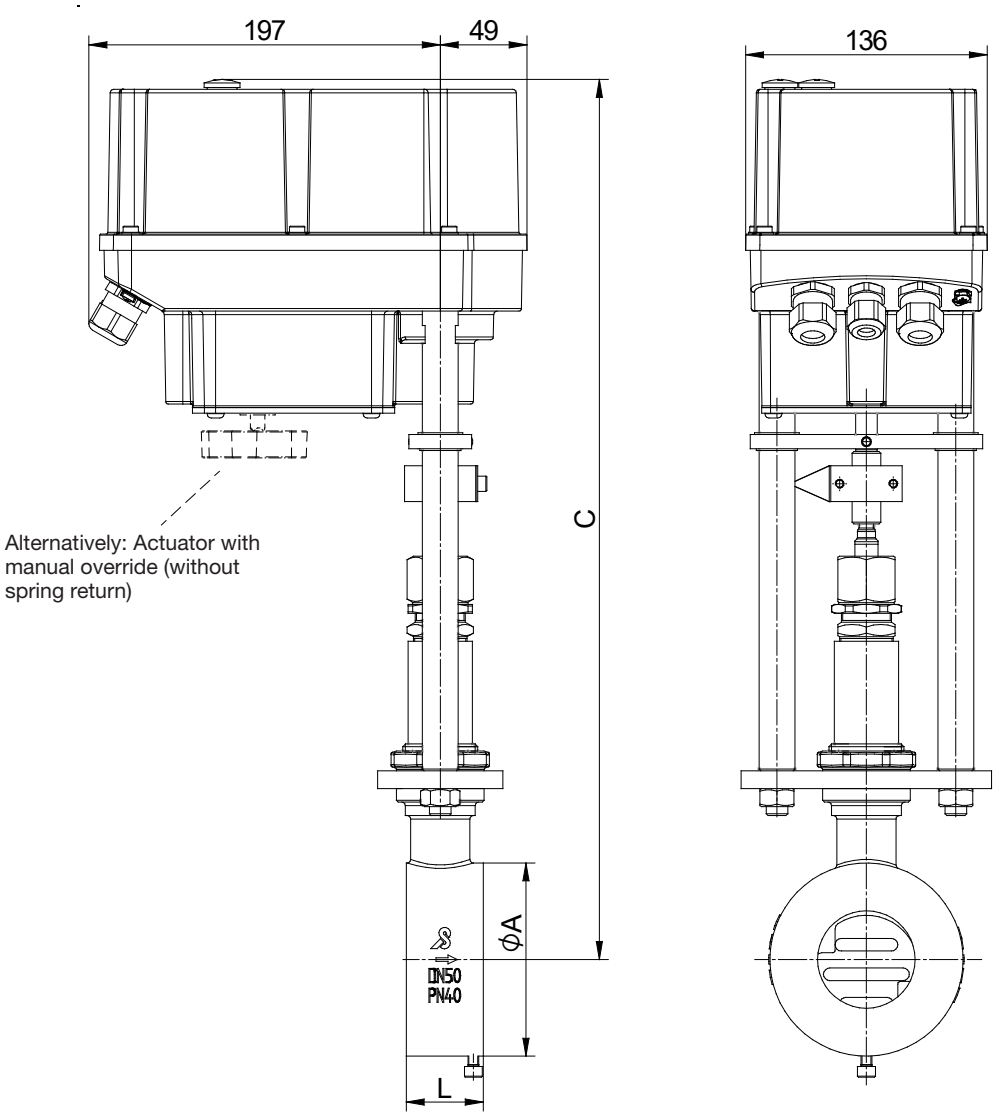

DN	Ø A	C	L	Stroke [H]	Weight [kg]
15	53	462	33	6,25	9,8
20	62	467	33	6,25	9,9
25	72	472	33	6,25	10,0
32	82	477	33	6,25	10,1
40	92	482	33	6,25	10,2
50	108	492	43	8,25	11,4
65	127	502	46	8,25	11,9
80	142	507	46	8,25	12,6
100	164	522	52	8,75	13,8
125	194	537	56	8,75	15,6
150	219	552	56	8,75	17,5

Dimensions in mm

Actuator (Type 2037) dimensions and weights

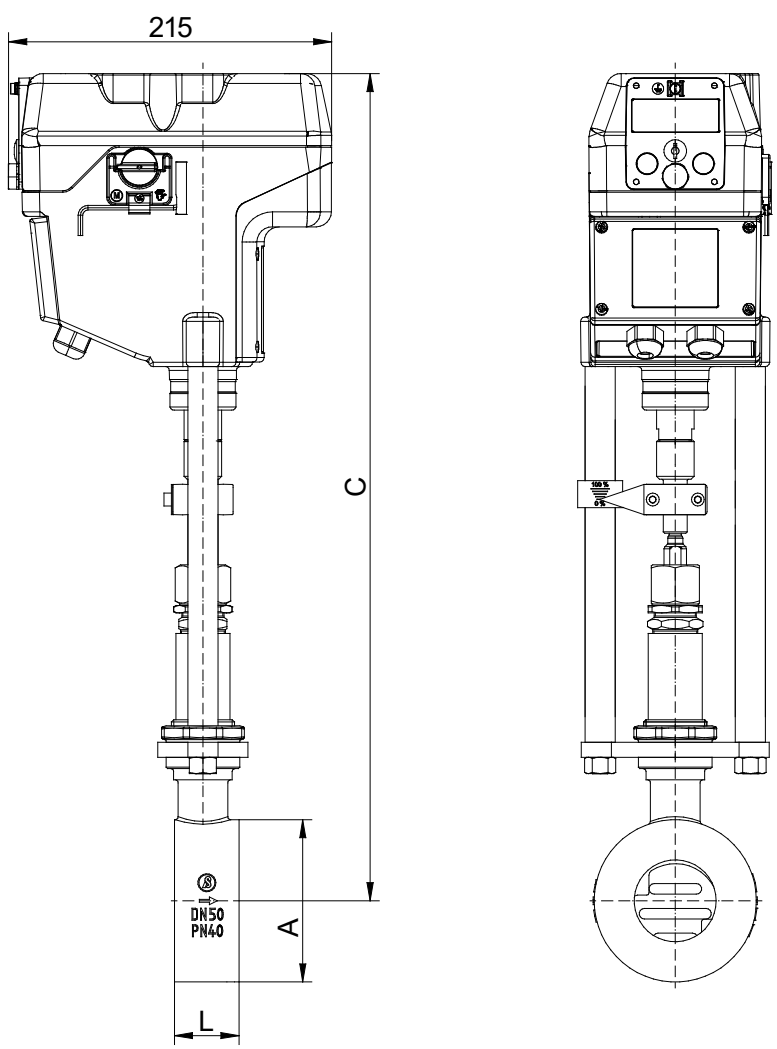

DN	Ø A	C	L	Stroke [H]	Weight [kg]
15	53	520	33	6	10,6
20	62	525	33	6	10,7
25	72	530	33	6	10,8
32	82	535	33	6	11,2
40	92	540	33	6	11,3
50	108	550	43	8	12,6
65	127	560	46	8	13,2
80	142	570	46	8	13,9
100	164	580	52	8,5	15,6
125	194	595	56	8,5	19,0
150	219	610	56	8,5	20,7

Dimensions in mm

Sliding Gate Motor Valve 8037-GS1

Enquiry sheet for sliding gate valves

Valve dimensioning

In order to be able to dimension a valve for a quotation, at least the following data must be known:

1. Medium

(Designation, composition and aggregate state)

2. Operating data

		minimal	normal	maximum	units
Input pressure	P1				
Output pressure	P2				
Temperature	T1				
Flow rate	Q				

3. Valve function

☐ Control valve ☐ Stop valve

4. Type of actuator

☐ Electrically operated Voltage V

☐ Spring opens (NO) ☐ Spring closes (NC)

5. Accessory

☐ Limit switch ..... Piece ☐ Manual override with handwheel

6. Other requests