Adjustable Sliding Gate orifice 8090

Series GS1 - DN15 to DN150

Continuously adjustable sliding gate orifice plate for precise adjustment of a defined flow rate.

- Infinitely adjustable in the built-in status
- Manual adjustment with safety device
- Optional sealable
- Defined characteristic curve
- Stops at the end positions
- Space-saving intermediate flange construction
- Very light weight
- Low noise operation
- Insensitive to cavitation
- Meets the requirements of TA-Luft 2021



short version

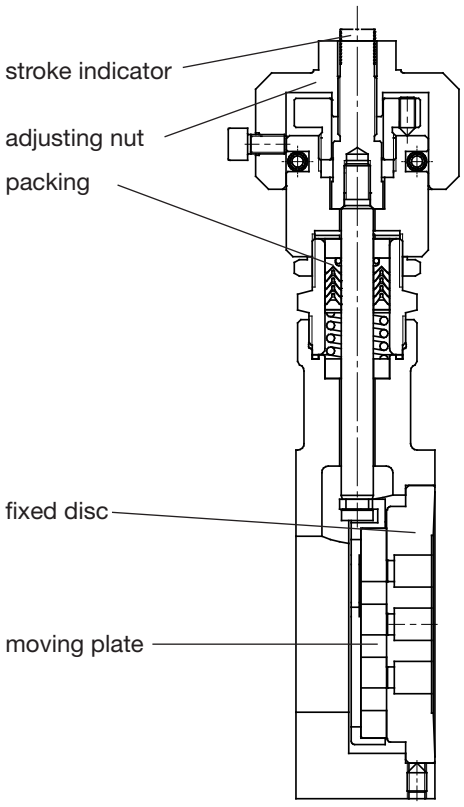

long version

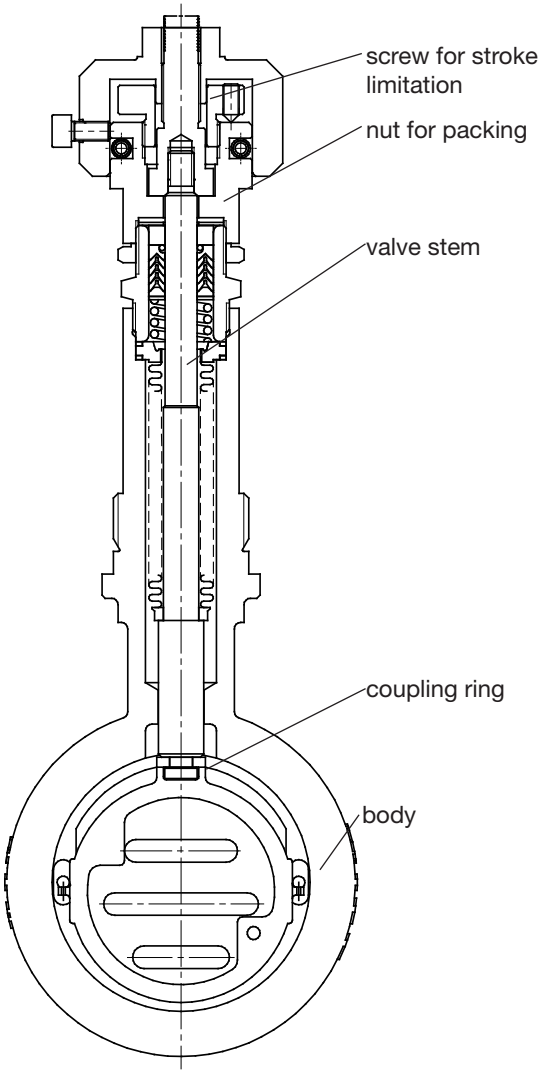

Schubert & Salzer Control Systems GmbH, Bunsenstr. 38, 85053 Ingolstadt, Tel: +49 (0)841-9654 0, Fax: +49 (0)841 9654 590
info.cs@schubert-salzer.com, www.schubert-salzer.com

Adjustable Sliding Gate orifice 8090-GS1

SCHUBERT SALZER

Technical information

Body design	flangeless, wafer-type construction dimensions acc. DIN EN 558-1 series 20 for flanges acc. DIN EN 1092-1, form B more versions see data-sheet 8090-GS3	
Nominal size	DN 15 to DN 150	
Nominal pressure	PN 40 acc. DIN 2401 (also for flanges PN 10 to PN 25)	
Fluid temperature	carbon steel body long	-10°C up to +350°C (+300°C with SFC)
	stainless steel body long	-60°C up to +350°C (+300°C with SFC)
	carbon steel body short stainless steel body short	-10°C to +230°C -20°C to +230°C, optional -60°C to +230°C
Ambient temperature	-30°C up to +140°C	
Flange gaskets (customer side)	DIN EN 1514-1 or ANSI B16.21 in the respective nominal pressure rating	
Packing leakage	ISO FE - BH - CC3 - SSA0 - t (-40°C / +350 °C) - PN40 - ISO 15848-1	

Materials

Body	Carbon steel 1.0619	Stainless steel 1.4408
Packing	PTFE carbon filled (spring 1.4310)	
Actuating stem	Stainless steel 1.4571, roller burnished	
Bellows (optional)	Stainless steel 1.4571	
Fixed disc	Stainless steel 1.4571 coated	STN2 - disc
Sliding disc	Special carbon material	STN2 - disc
Coupling ring for disc	Stainless steel 1.4581	
Adjusting nut	Stainless steel 1.4404	

Admissible Differential Pressure

DN	carbon/SFC-stainless steel	STN2
	max. differential pressures	
	bar	bar
15	40	40
20	40	40
25	40	40
32	40	40
40	40	27
50	40	40
65	40	38
80	40	22
100	25	13,5
125	16,5	8,9
150	16	11

For tempratures of 120°C and above: obey application limits!

	Sliding unit: carbon/SFC - stainless steel, coated						Sliding unit: carbon - STN2					
	max. admissible pressures for GS1-valves						max. admissible pressures for GS1-valves					
DN	100°C	150°C	200°C	250°C	300°C	350°C	100°C	150°C	200°C	250°C	300°C	350°C
15 - 25	40	36	31	28	26	24	40	36	31	28	26	24
32	40	36	31	28	26	24	40	36	31	28	25	22
40	40	36	31	28	26	24	27	26	24	19,5	16	14
50	40	36	31	28	26	24	40	36	31	28	26	24
65	40	36	31	28	26	24	38	36	31	28	23	19,5
80	40	36	31	28	26	24	22	21	20	16	13	11,5
100	25	24	22	19	16	14,5	13,5	12,5	12,0	9,8	8,1	7,0
125	16,5	15,5	15	12,5	10,5	9,5	8,9	8,4	8,0	6,5	5,3	4,6
150	16	16	16	16	13	11,5	11	10,5	9,8	7,9	6,5	5,6

Limitation for SFC-sliding discs: 300°C

Adjustable Sliding Gate orifice 8090-GS1

SCHUBERT SALZER

Ordering Number System

1	2	3	4	5	6	7	8	9	10	11...16
8	0	9	0	/				V	B					M						

Type: 8090 / Size: | | | | V: Symbol "V": Valve, B: "R": Repair kit (sealings) | | | | | M

1 - 5 : Please quote all 5 sections.
6 - 16: Quote only if required.

1. Type		2. Connection		3. Body material		4.		5. Actuator		6. Special version	
A	Adjustable GS orifice short version	0	GS1-flangeless design acc. DIN PN10-40 (for flange acc. DIN EN 1092-1, form B)	0	Carbon-steel 1.0619	-	here without meaning	A	manually operated	M	special versions (Pos. 7-16)
B	Adjustable GS orifice long version			1	stainless steel 1.4408					A	nut and nut acc. DIN EN1092-1
										C	nut and tongue acc. DIN EN1092-1
										E	2x lowered face acc. DIN EN1092-1
										H	lowered and raised face acc. DIN EN1092-1

7.		8. Stem sealing		9. Moving valve disc		10. Fixed valve plate		11. Kvs-values		12. Characteristic	
-	here without meaning	-	PTFE-packing, self adjusting (standard)	-	Carbon material	-	standard coating	-	100 % (Stand.)	-	linear
		1	additional metal bellow 1.4571	9	STN2/STN3	1	STN2			1	equal percentage
		7	Packing for lower temperatures, down to -60°C	T	HMC	3	STN3				
				H	Hardmetal (solid material KR16)	H	Hardmetal (solid material KR16)				

Ordering example: 8090/015VA000AM--91--Z-1
Adjustable GS orifice, DN 15 (Kvs 4; Cv 4,6), short version, GS1-flangeless design acc. DIN, PN10-PN40, body material carbon steel, stem sealing PTFE-set of roof cuffs, pairing of sealing discs: STN2/STN3, characteristic linear 100%, additional locking nut

Optional with locking nut and locking plate

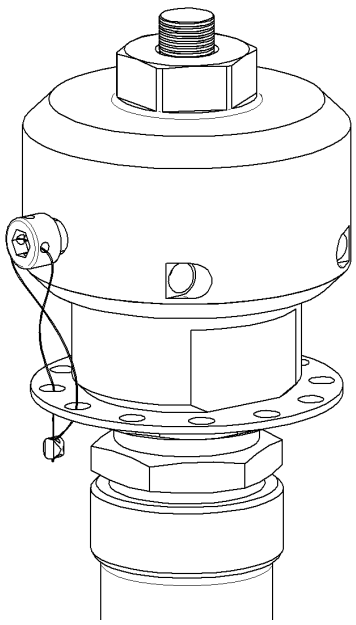

Dimensions and weight short version

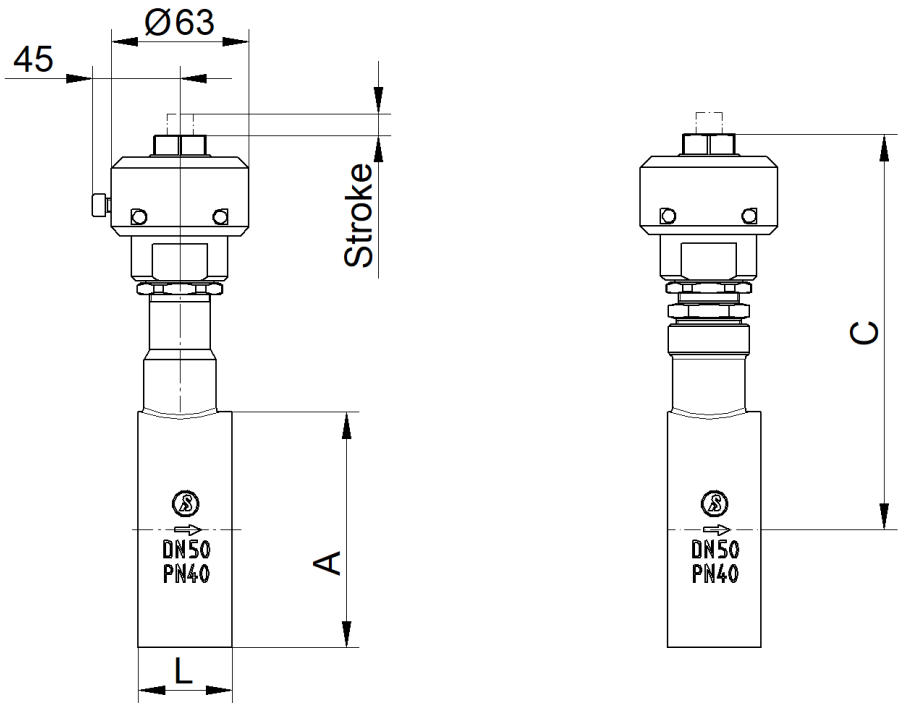

DN	A	C stainless steel	C carbon steel	L	Stroke	Weight [kg]
15	53	139	161	33	5,2	4,2
20	62	144	166	33	4,7	4,5
25	72	149	171	33	4,7	4,6
32	82	153	175	33	4,7	4,7
40	92	158	180	33	4,7	4,8
50	108	170	192	43	6,7	5,7
65	126	180	202	46	6,7	6,1
80	142	188	210	46	6,7	9,5
100	164	200	222	52	7,2	7,7
125	194	213	235	56	7,2	9,5
150	219	228	250	56	6,7	11,4

dimensions in mm

Dimensions and weight long version

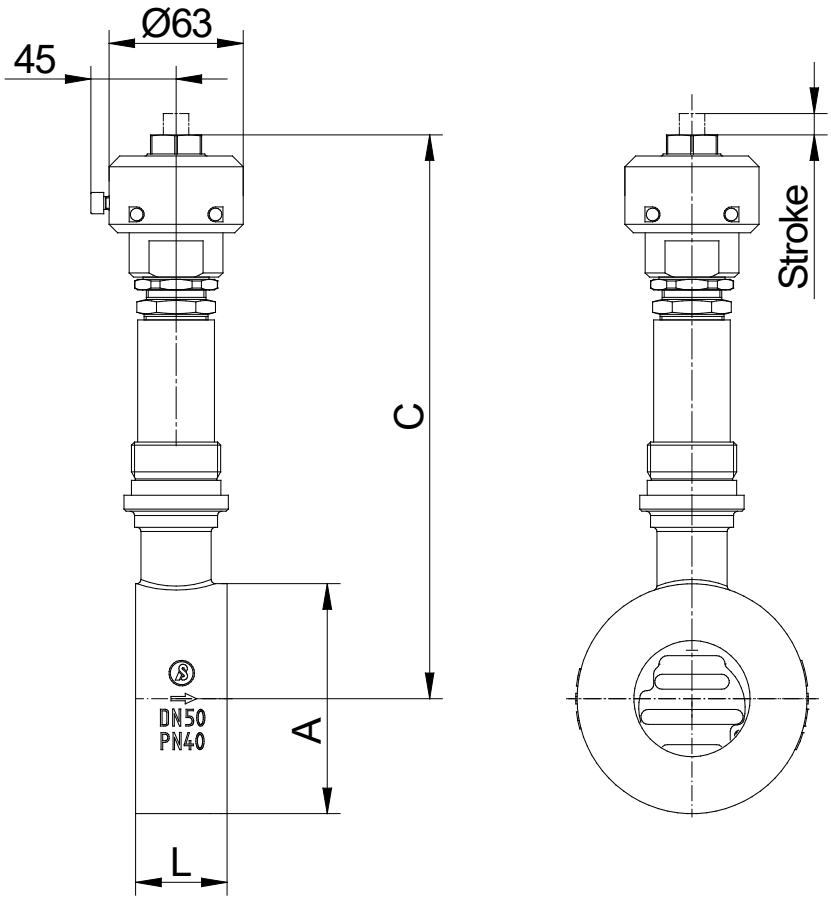

DN	A	C	L	Stroke	Weight [kg]
15	53	236	33	5,2	4,5
20	62	241	33	4,7	4,7
25	72	246	33	4,7	4,8
32	82	249	33	4,7	4,9
40	92	254	33	4,7	5
50	108	265	43	6,7	6
65	126	274	46	6,7	6,4
80	142	282	46	6,7	10
100	164	295	52	7,2	8,1
125	194	308	56	7,2	10
150	219	323	56	6,7	11,9

dimensions in mm

Text and pictures are not binding. We reserve the right, to alter the equipment.