Ball Sector Motor Valve 4037

ex-proof
DN 25 up to DN 100

- DN 25 up to DN 100
- Robust alluminium body of the actuator
- Excellent control characteristics
- Universal voltage supply
- Easily exchangeable seat ring
- Low maintenance
- Adjustable strokingtimes
- Protection class IP 66
- Manual emergency adjustment
- Efficient and easy to install
- Integrated heating system
- Spring return function on demand
- Optional with face to face dimension acc. ANSI ISA 75.08.02



Technical Information Valve

Design	flangeless wafertype		
Nominal sizes	DN 25 up to DN 100		
Body material cast parts turned parts	1.4408 (CF8M) 1.4404 (316L)		
Bearing material	high temperature plain bearing (Iglidur Z)		
Nominal pressure DN 25 - DN 50 DN 65 - DN 100	PN40 (for flanges PN 10 - PN 40), ANSI150, ANSI300 PN25 (for flanges PN 10 - PN 25), ANSI150, ANSI300		
Fluid Temperature	-40°C up to +220°C depending on the sealings		
Ambient Temperature	-40°C up to 50°C		
Vacuum	up to 50 mbar abs.		
Characteristic	almost equal percentage		
Rangeability	100:1		
Spezific leckage rate shaft and body sealing	ISO FE-BH-CC3-SSA0-t(-40°C/+220°C)-PN40-ISO 15848-1		
Leakage rate % of Kvs IEC 60534-4	Seat ring: PTFE / PEEK Ball sector: Polished stainless steel < 0,00001 IV-S1	Seat ring: PTFE / PEEK Ball sector: Hard chrome-plated stainless steel < 0,00005 IV-S1	Seat ring: Stellite Ball sector: Stainless steel hard chrome-plated and lapped < 0,0005 IV-S1

Data of the actuator

Voltage supply	24 … 230 V AC/DC
Protection class	IP 66
Input signal	4-20 mA or 0-10 V
Feedback signal	4-20 mA or 0-10 V
EX-Protection (gas)	II 2 (2) G Ex db [ib Gb] IIC T6, T5, T4 Gb
EX-Protection (dust)	II 2 (2) D Ex tb [ib Db] IIIC T80°C, T95°C, T130°C Db
Ambient Temperature	T5: -40°C up to 40°C T6: -40°C up to 50°C
Motor	Brushless DC Motor
Maitenance	Maintenance free actuator
Diameter of cable	~Ø7,1 mm and ~Ø7,4mm - 1m cable (for on/off different)
Reverse function	Bridge between clamp 3 and 4
Holding Power	20 W (~16 W when heating)
Current consumption initialization	2 A

ATEX - Versions

EX-Protection (gas)	II 2G Ex d [ia] IIC T6, T5	Zone 1 and 2
EX-Protection (dust)	II 2D Ex tD [iaD] A21 IP66 T80, T95°C	Zone 21 and 22
EX-Protection (gas)	II3G Ex nC II T6 / II3(1)G Ex nC [ia] IIC T6	Zone 2
EX-Protection (dust)	II3D Ex tD A22 IP66 T80°C	Zone 22
Industrial applications without Ex certification	none	

Schubert & Salzer Control Systems GmbH, Bunsenstr. 38, 85053 Ingolstadt, Tel: +49 (0)841-9654 0, Fax: +49 (0)841 9654 590
info.cs@schubert-salzer.com, www.schubert-salzer.com

Ball Sector Motor Valve 4037

ex-proof

Working pressure

DN	maximum differential pressure (delta p)									
	seat ring PTFE			seat ring PEEK				seat ring Stellit		
	up to 80°C bar	120°C bar	170°C bar	up to 80°C bar	120°C bar	170°C bar	220°C bar	up to 80°C bar	170°C bar	220° C bar
25-50	25	16	6	40	40	25	16	40	40	25
80-100	16	12	5	25	25	16	10	25	25	16

Temperature limits

	220Sealing seatring22									
	Viton		EPDM		NBR		FFKM		PFA-Silicone	
Seatring	Tmin [°C]	Tmax [°C]	Tmin [°C]	Tmax [°C]	Tmin [°C]	Tmax [°C]	Tmin [°C]	Tmax [°C]	Tmin [°C]	Tmax [°C]
PTFE	-15	170	-40	140	-30	100	-15	170	-45	170
PEEK	-15	200	-40	140	-30	100	-15	220	-45	220
Stellit	-15	200	-40	140	-30	100	-15	220	-45	220

Kvs-Values

DN	Kvs-Value reduced to					
	100%	63%	40%	25%	16%	6,3%
25	25	12,7	7,9	5,3	3,6	1,45
40	70	40	25			
50	109	65	41			
65	190					
80	300					
100	390					
125	756					
150	810					
200	1365					
250	2220					
300	3840					

Ball Sector Motor Valve 4037

ex-proof

Rotary time settings / rated current

rotary swith setting	DN25-DN50 rotation time	actuator torque	rated current 24V	rated current 230V	DN65-DN100 rotation time	actuator torque	rated current 24V	rated current 230V
0	3/7,5 sec/90°		4,7 A	0,5 A	40 sec/90°		1,0 A	0,3 A
1	15 sec/90°		1,45 A	0,3 A	60 sec/90°		0,7 A	0,2 A
2	30 sec/90°	15 Nm	0,52 A	0,15 A	90 sec/90°	50 Nm	0,5 A	0,15 A
3	60 sec/90°		0,4 A	0,1 A	120 sec/90°		0,4 A	0,1 A
4	120 sec/90°		0,4 A	0,1 A	150 sec/90°		0,4 A	0,1 A
5	7,5 sec/90°		4,7 A	0,5 A	40 sec/90°		1,0 A	0,3 A
6	15 sec/90°		1,45 A	0,3 A	60 sec/90°		0,7 A	0,2 A
7	30 sec/90°	30 Nm	0,52 A	0,15 A	90 sec/90°	75 Nm	0,5 A	0,15 A
8	60 sec/90°		0,4 A	0,1 A	120 sec/90°		0,4 A	0,1 A
9	120 sec/90°		0,4 A	0,1 A	150 sec/90°		0,4 A	0,1 A

Standard

rotary swith setting	DN25 (with spring return) rotation time	actuator torque	rated current 24V	rated current 230V	DN40/50/65/80 (with spring return) rotation time	actuator torque	rated current 24V	rated current 230V
0	3/7,5 sec/90°		4,7 A	0,5 A	40 sec/90°		2,0 A	0,4 A
1	15 sec/90°		1,45 A	0,3 A	60 sec/90°		1,8 A	0,3 A
2	30 sec/90°		0,52 A	0,15 A	90 sec/90°		1,4 A	0,15 A
3	60 sec/90°		0,4 A	0,1 A	120 sec/90°		1,4 A	0,1 A
4	120 sec/90°		0,4 A	0,1 A	150 sec/90°	30 Nm	1,4 A	0,1 A
5	7,5 sec/90°	15 Nm	4,7 A	0,5 A	40 sec/90°	(50Nm DN80)	2,0 A	0,4 A
6	15 sec/90°		1,45 A	0,3 A	60 sec/90°		1,8 A	0,3 A
7	30 sec/90°		0,52 A	0,15 A	90 sec/90°		1,4 A	0,15 A
8	60 sec/90°		0,4 A	0,1 A	120 sec/90°		1,4 A	0,1 A
9	120 sec/90°		0,4 A	0,1 A	150 sec/90°		1,4 A	0,1 A
	spring return about 3 or 10 sec./90°				spring return about 20 sec./90°			

Standard

Wiring diagram (further more in the operating instructions)

Control

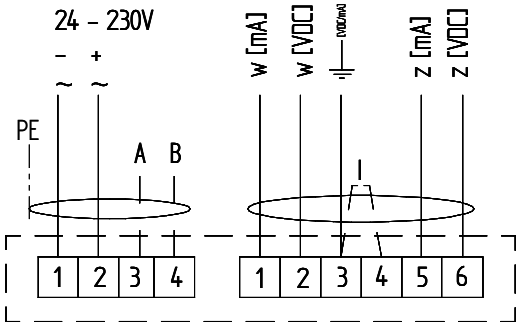

Options within every control actuator:

Jumper I: inverse the control and feedback signal

Voltage on A: Force the actuator to close

Voltage on B: Force the actuator to open

on/off - 3 point

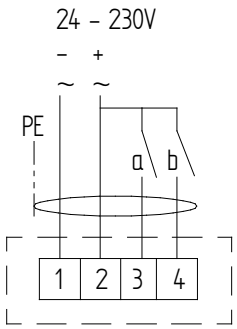

Ball Sector Motor Valve 4037

ex-proof

Dimensions KS2 with actuator

Sealing of the bearing shaft with PTFE-packing

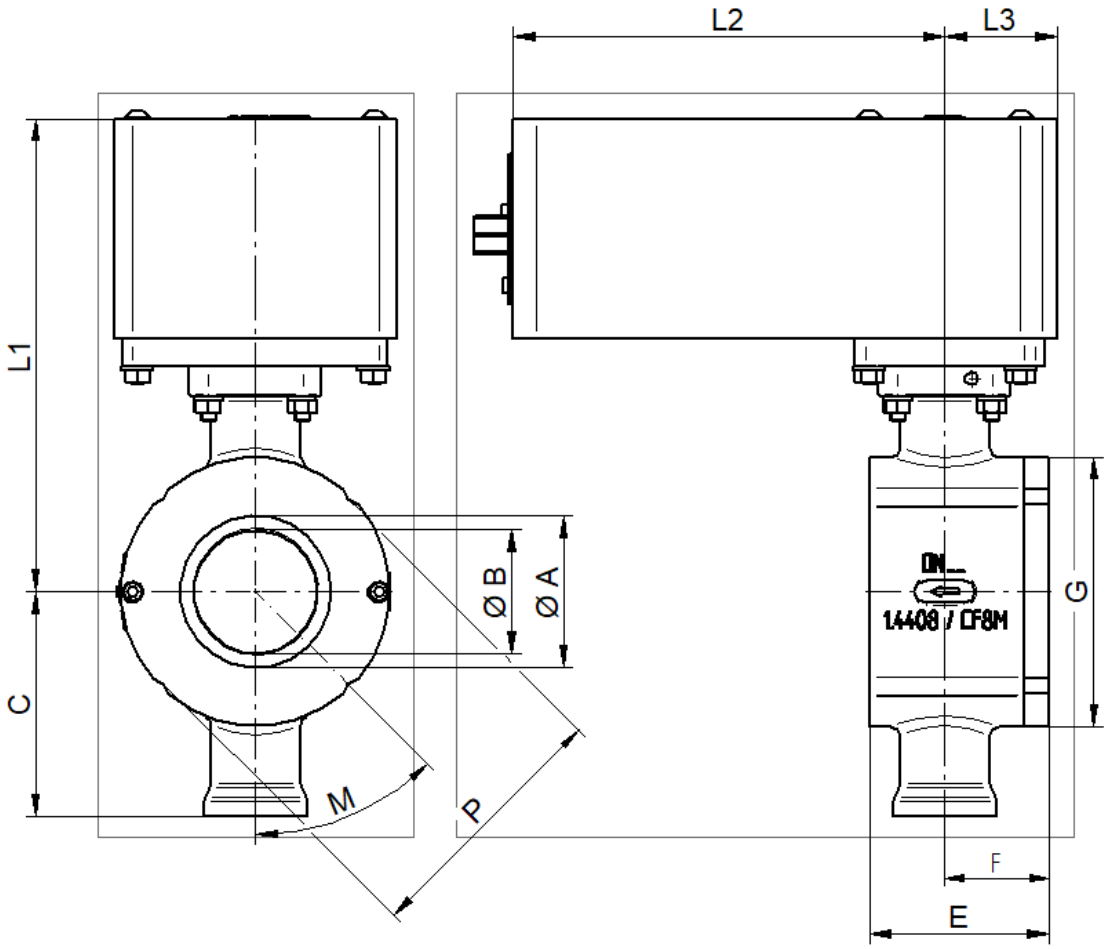

DN	A	B	C	E	F	L1	L1*	L2	L2*	L3	L3*
25	25	20	85	50	26	180	180	166	166	44	44
40	41	32	92	58	31	187	223	166	229	44	59
50	53	40	95	71	38	190	226	166	229	44	59
65	65	50	115,5	85	49	247	247	229	229	59	59
80	80	65	118,5	95	55	250	250	229	229	59	59
100	100	80	129,5	112	62	261	---	---	---	59	---

DN	PN					ANSI 150				ANSI 300			
	PN	G	P	M	Amount	G	P	M	Amount	G	P	M	Amount
25	PN40	75	73	45	4	75	67,6	45	4	79	73	45	4
40	PN40	96	94	45	4	96	87	45	4	99	94	45	4
50	PN40	112	106	45	4	112	106	45	4	112	0	0	0
65	PN25	129	0	0	0	129	125	45	4	129	0	0	0
80	PN25	142	0	0	0	142	138	45	4	150	0	0	0
100	PN25	174	164	22,5	8	176	0	0	0	182	0	0	0

* With spring return

Dimensions in mm

Text and pictures are not binding. We reserve the right, to alter the equipment.