Sliding Gate Valve 8020

GS 1 series - DN 15 up to DN 150

Pneumatic sliding gate valve for controlling and shutting off liquid and gaseous media for industrial applications



- Space saving wafer type construction
- Lowest possible weight
- Quiet operation
- Fast response time
- Control of high differential pressures with small actuators
- Greatly reduced energy consumption rates due to short strokes and low actuating forces on the throttle element
- High Kvs-values
- Meets the requirements of TA-Luft 2021

Technical Information

Body design	flangeless, wafer-type construction dimensions acc. DIN-EN 558-1 series 20 for flanges acc. DIN EN 1092-1 form B more versions see on data-sheet 8020-GS3		
Nominal sizes	DN 15 to DN 150		
Nominal pressure	PN 40, DIN 2401 also for flanges PN 10 to PN 25		
Media temperature	carbon steel body stainless steel body	-10°C up to +350°C -60°C up to +350°C	
Ambient temperature*	-30°C up to +100°C		
Flange gaskets (customer side)	DIN EN 1514-1 or ANSI B16.21 in the respective nominal pressure rating		
Rangeability / Characteristic	40 : 1 linear / 80 : 1 equal percentage		
Leakage **	Disc pair Carbon-stainless steel	Disc pair SFC	Disc pair STN2
% of Kvs	< 0,0001	< 0,0005	< 0,001
IEC 60534-4	IV-S1	IV-S1	IV
EN 12266-1	E	F	F
Marking ATEX non electric	II 2G Ex h IIC T6…T1 X Gb II 2D Ex h IIIC 85°C…530°C X Db		
Packing leakage	ISO FE-BH-CC3-SSA0-t(-40°C/+350°C)-PN40-ISO 15848-1 DIN EN ISO 15848-1 and VDI 2440		

* Please consider the limitation of use of the positioner!

** With DN15 with reduction of less than 25%, different leakage rates possible. Kvs-values see data sheet 8001.

Schubert & Salzer Control Systems GmbH, Bunsenstr. 38, 85053 Ingolstadt, Tel: +49 (0)841-9654 0, Fax: +49 (0)841 9654 590
info.cs@schubert-salzer.com, www.schubert-salzer.com

Sliding Gate Valve 8020-GS1

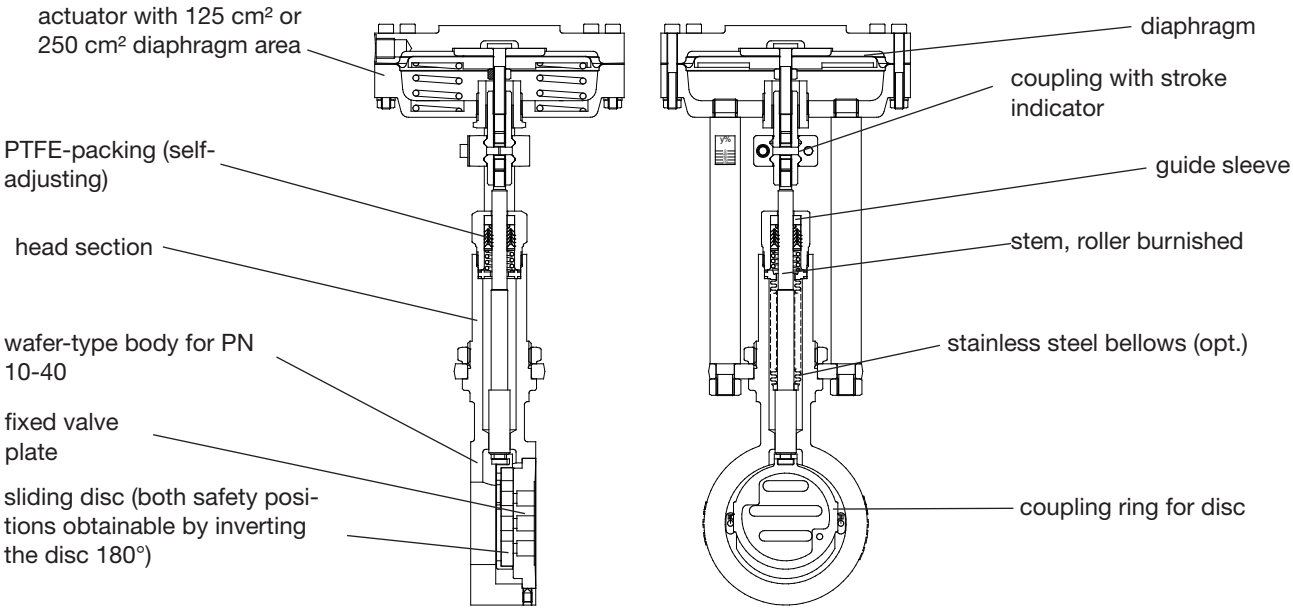

Admissible Differential Pressure
(For temperatures of up to 120°C)

For temperatures of 120°C and above: obey application limits !

Disc pair: carbon - stainless steel
SFC - stainless steel

Diaphragm area	125 cm²					250 cm²				
Spring range (bar)	0.2 to 1.0	1.0 to 2.0	1.5 to 3.0	1.8 to 3.8	2.1 to 4.5	0.2 to 1.0	0.8 to 1.4	1.2 to 2.2	1.5 to 2.7	1.7 to 3.2
Supply air (bar)	1,2	2,8	4,2	5,2	6,0	1,2	2,1	3,2	4,0	4,6
DN	Admissible differential pressures in bar (see pressure diagram for GS-Valves)									
15	4,4	40	40	40	40	18,9	40	40	40	40
20	3,8	40	40	40	40	16,4	40	40	40	40
25	3,2	40	40	40	40	13,7	40	40	40	40
32	2,6	40	40	40	40	11,3	40	40	40	40
40	2,0	40	40	40	40	8,5	40	40	40	40
50	-	36	40	40	40	5,8	40	40	40	40
65	-	29	40	40	40	4,9	40	40	40	40
80	-	17	26	33	39	3,1	30	40	40	40
100	-	10	16	20	24	-	18	25	25	25
125	-	6,5	10	13	15	-	12	16	16	16
150	-	5	7,5	9	11	-	8,5	13	16	16
Springconfiguration	D	2	3	4	5	D	2	3	4	5

Standard

Disc pair: STN 2

Diaphragm area	125 cm²					250 cm²				
Spring range (bar)	0.2 to 1.0	1.0 to 2.0	1.5 to 3.0	1.8 to 3.8	2.1 to 4.5	0.2 to 1.0	0.8 to 1.4	1.2 to 2.2	1.5 to 2.7	1.7 to 3.2
Supply air (bar)	1,2	2,8	4,2	5,2	6,0	1,2	2,1	3,2	4,0	4,6
DN	Admissible differential pressures in bar (see pressure diagram for GS-Valves)									
15	3,1	40	40	40	40	13,4	40	40	40	40
20	2,4	40	40	40	40	10,3	40	40	40	40
25	1,8	40	40	40	40	7,7	40	40	40	40
32	1,3	38	40	40	40	5,7	40	40	40	40
40	0,9	23	27	27	27	3,9	27	27	27	27
50	-	13	20	25	30	2,4	23	35	40	40
65	-	10	16	20	24	2,0	18	28	34	38
80	-	6	9	11	14	1,2	10	16	19	22
100	-	3,5	5,5	7	8,5	-	6,5	10	12	13
125	-	2,5	3,5	4,5	5,5	-	4	6,5	8	9
150	-	1,5	2,5	3,5	4	-	3	4,5	5,5	6,5
Springconfiguration	D	2	3	4	5	D	2	3	4	5

Standard

The quoted pilot pressure must be available as a minimum value for use without a positioner. If a positioner is applied the pilot pressure is determined by the adjustment of the positioner. The standard adjustment value is 4 bar gauge. The spring configuration D enables the use of the control valve without positioner in line with a restricted control capacity. In this case the valve can be driven by a controller with a standard signal of 0.2 to 1.0 bar.

Applications limits for GS1-Valves

PN 40

	Sliding unit: carbon/SFC - stainless steel, coated						Sliding unit: carbon - STN2					
	max. admissible pressures for GS1-valves						max. admissible pressures for GS1-valves					
DN	100°C	150°C	200°C	250°C	300°C	350°C	100°C	150°C	200°C	250°C	300°C	350°C
15 - 25	40	36	31	28	26	24	40	36	31	28	26	24
32	40	36	31	28	26	24	40	36	31	28	25	22
40	40	36	31	28	26	24	26	25	24	19	16	14
50	40	36	31	28	26	24	40	36	31	28	26	24
65	40	36	31	28	26	24	37	35	31	27	22	19
80	40	36	31	28	26	24	22	20	19	16	13	11
100	24	23	22	19	17	16	13	12	12	9	8	6
125	16	15	14	13	11	10	8	8	7	6	5	4
150	16	16	16	16	14	13	10	10	9	7	6	5

Limitation for SFC-sliding discs: 300°C

Materials

Body	Carbon steel 1.0619	Stainless steel 1.4408
Diaphragm housing	Aluminium KTL coated	
Packing	PTFE (Carbon filled), spring 1.4310	
Actuating stem	Stainless steel 1.4571, roller burnished	
Bellows	Stainless steel 1.4571	
Fixed disc	Stainless steel 1.4571, coated	STN2-disc
Sliding disc	Special carbon material or SFC	STN2-disc
Coupling ring	Stainless steel 1.4571	

Ordering-Number System

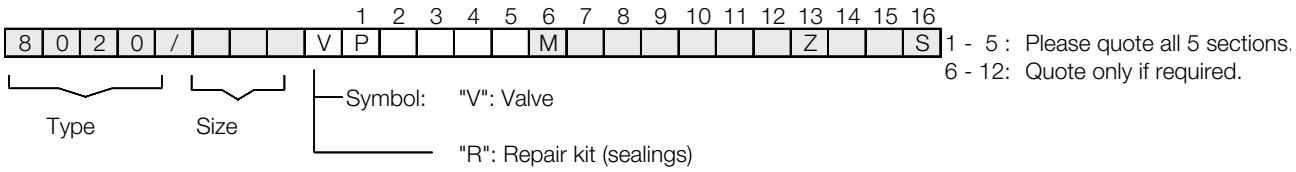

1.	Type	2.	Connection	3.	Body material	4.	Safety position	5.	Actuator	6.	Special versions	7.	Springs	8.	Stem sealing
P	Pneumatic sliding gate valve type 8020	0	Flangeless design acc. DIN 2632-2635 (PN10-PN40)	0	Carbon steel 1.0619	0	spring closes	3	Diaphragm 125 cm²	M	State, if further sections are quoted	-	Standard	-	PTFE-packing, self adjusting (standard)
				1	Stainless steel 1.4408	1	spring opens	4	Diaphragm 250 cm²			1	2 springs	1	Additional bellow 1.4571
												2	4 springs		
												3	6 springs		
												4	8 springs		
												5	10 springs		
												D	Spring set 0,2-1 bar		

9.	Moving disc	10.	Fixed disc	11.	Kvs-values	12.	Charac-teristic	13.	Acces-sories	14.	Positioner	15.	Feedback	16.	Special versions
-	Carbon material	-	Stainless steel 1.4571, coated	-	100% (Stand.)	-	linear	Z	Acces-sories	-	without	-	Without	S	Further special versions
9	STN2-disc			A	red. to 63%	1	equal per-centage			1	p/p-positio-ner without gauges	0	2 ind. limit switches M12x1 DC 10-30V		
S	SFC-disc	1	STN2-disc	1	red. to 40%										
				B	red. to 25%					2	p/p-posi-tioner with gauges	5	2 ind. limit switches M12x1DC 10-55V		
				2	red. to 16%										
				C	red. to 10%					3	i/p-positioner, without gauges	D	1 ind. limit switch M12x1 DC 10-30V		
				3	red. to 6,3%										
				4	red. to 2,5%					4	i/p-positioner with gauges				
				5	red. to 1%										
				6	red. to 20%					6	i/p-positioner, ex-proof wit-hout gauges	6	1 ind. limit switch M12x1 DC 10-55V		
				7	red. to 12%										
				8	red. to 2%					7	i/p-positioner, ex-proof with gauges				
				9	red. to 0,4 %										

Ordering Example:	8020/080VP0103M5 - - - - - Z3 Sliding gate valve with pneumatic actuator, DN 80, PN 10/40, stainless steel, normally closed, actuator 125 cm² (standard design) with 10 springs, PTFE-V-shaped seal, carbon material-stainless steel 1.4571, Kvs-value 100 %, Fow characteristic linear, I/p-positioner without gauges ex-proof

Dimensions and Weights

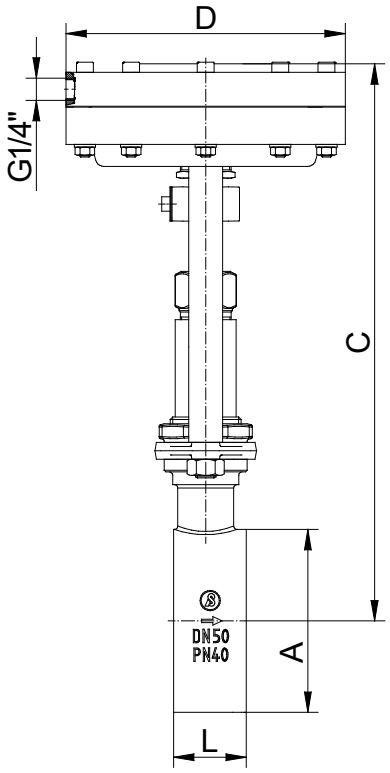

DN	A mm	C mm	Ø D for actuator 125	Ø D for actuator 250	L mm	Weight (Kg) for actuator 125	Weight (Kg) for actuator 250	Stroke mm
15	53	305	165	222	33	5,9	8,1	6
20	62	310	165	222	33	6	8,2	6
25	72	315	165	222	33	6,2	8,4	6
32	82	320	165	222	33	6,5	8,7	6
40	92	325	165	222	33	6,7	8,9	6
50	108	335	165	222	43	7,9	10,1	8
65	127	345	165	222	46	8,7	10,9	8
80	142	355	165	222	46	9,3	11,5	8
100	164	365	165	222	52	10,5	12,7	8,5
125	194	380	165	222	56	12,7	14,9	8,5
150	219	395	165	222	56	14,2	16,4	8,5

Dimensions in mm

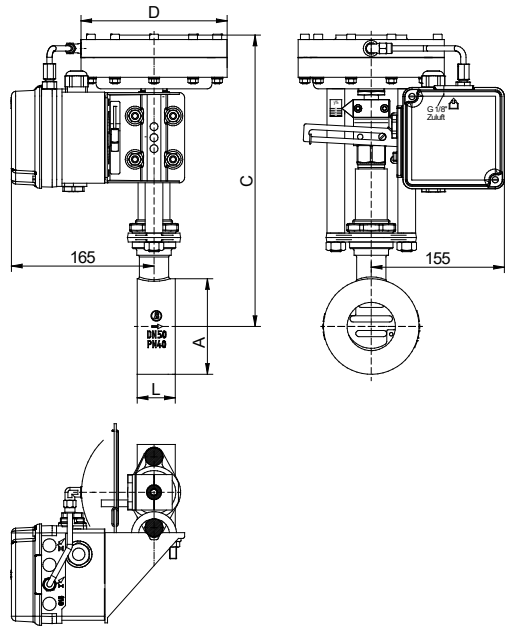

with pneumatic positioner

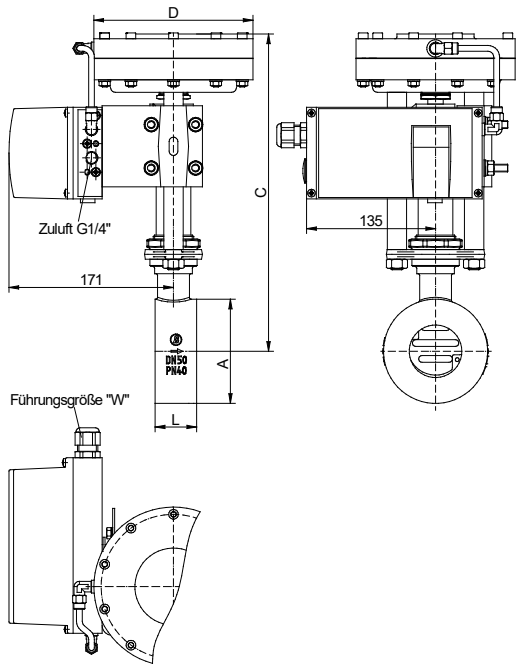

with electropneumatic positioner