Sliding Gate Valve 8044

GS 1 series - DN 15 up to DN 150



Pneumatic sliding gate valve with integrated positioner for the control of liquid and gaseous media for industrial applications

- Space saving design and low weight
- Fast response due to short strokes
- High Kvs- (Cv)- values
- Tight shut- off even at higher temperatures
- No exposed moving parts
- No steady- state air consumption
- Operation independent of mounting position and supply pressure variations
- Not sensitive to vibration
- Instrument grade air not essential
- Software configurable flow characteristics
- Protection Class IP65
- Meets the requirements of TA-Luft 2021

Technical Information

Body design	flangeless, wafer-type construction dimensions acc. DIN EN 558-1 series 20 for flanges acc. DIN EN 1092-1 form B		
Nominal sizes	DN 15 to DN 150		
Nominal pressure	PN 40 according DIN 2401, also for flanges PN 10 - PN 25		
Fluid temperature	carbon steel body -10°C to +230°C stainless steel body -20°C to +230°C, optional -60°C to +230°C		
Ambient temperature*	digital positioner -10°C up to +75°C analog positioner -15°C up to +60°C		
Flange gaskets (customer side)	DIN EN 1514-1 or ANSI B16.21 in the respective nominal pressure rating		
Rangeability / Characteristic analog positioner digital positioner	 25 : 1 30 : 1		
Leakage % of Kvs IEC 60534-4 EN 12266-1	Disc pair Carbon-stainless steel < 0,0001 IV-S1 E	Disc pair SFC < 0,0005 IV-S1 F	Disc pair STN 2 < 0,001 IV F
Marking ATEX non electric	II 2G Ex h IIC T6…T1 X Gb II 2D Ex h IIIC 85°C…350°C X Db		
Packing leakage	ISO FE - BH - CC3 - SSA0 - t (-40°C / +350 °C) - PN40 - ISO 15848-1		

* Please consider the limitation of use of the positioner!

** With DN15 with reduction of less than 25%, different leakage rates possible.
Kvs-values see data sheet 8001.

Materials

Body	carbon steel 1.0619	stainless steel 1.4408	
Bonnet	brass, chrome-plated (actuator Ø 80 mm),		
	aluminium KTL-coated, (actuator Ø 125 mm)		
Actuator springs	stainless steel 1.4310 (actuator Ø 80 mm);		
	spring steel wire C, plastic coated (actuator Ø 125 mm)		
Packing	PTFE carbon filled (spring 1.4310)		
Actuating stem	stainless steel 1.4571, roller burnished		
Bellows	stainless steel 1.4571		
Fixed disc	stainless steel 1.4581, coated		STN2 - disc
Sliding disc	special carbon material	SFC - disc	STN2 - disc
Coupling ring for disc	stainless steel 1.4581		
Window for positioner indicator	PA Trogamid (clean)		

Positioner

For technical information of our positioners please refer to the corresponding data sheets.

Schubert & Salzer Control Systems GmbH, Bunsenstr. 38, 85053 Ingolstadt, Tel: +49 (0)841-9654 0, Fax: +49 (0)841 9654 590
info.cs@schubert-salzer.com, www.schubert-salzer.com

digital positioner, Type 8049
(also on-off valves and valves with other side-mounted positioner)

Disc-pair: carbon - stainless steel coated
SFC - stainless steel coated

DN	actuator	max. differential pressures control, on/off	pilot pressures
15	80	40	3,5 - 6
20	80	40	3,5 - 6
25	80	40	3,5 - 6
32	80	40	4,0 - 6
40	80	30,4	4,0 - 6
50	80	19,5	4,5 - 6
65	80	16,3	4,5 - 6
80	80	10,2	5,0 - 6
100	80	6,5	5,0 - 6
125	80	4,4	5,0 - 6
150	80	3,3	5,0 - 6
15	125	40	3,0 - 6
20	125	40	3,0 - 6
25	125	40	3,0 - 6
32	125	40	3,0 - 6
40	125	40	3,0 - 6
50	125	40	3,5 - 6
65	125	37,6	3,5 - 6
80	125	23,6	4,0 - 6
100	125	15	4,0 - 6
125	125	10,1	4,0 - 6
150	125	7,5	4,0 - 6

Disc pair: STN2

DN	actuator	max.differential pressures control, on/off	pilot pressures
15	80	40	3,5 - 6
20	80	37,3	4,0 - 6
25	80	27,4	4,0 - 6
32	80	20,1	4,5 - 6
40	80	13,6	4,5 - 6
50	80	8	5,0 - 6
65	80	6,6	5,0 - 6
80	80	4	5,0 - 6
100	80	2,4	5,0 - 6
15	125	40	3,0 - 6
20	125	40	3,0 - 6
25	125	40	3,0 - 6
32	125	40	3,5 - 6
40	125	27	3,5 - 6
50	125	18,5	4,0 - 6
65	125	15,1	4,0 - 6
80	125	9,1	4,0 - 6
100	125	5,6	4,0 - 6
125	125	3,8	4,0 - 6
150	125	2,8	4,0 - 6

Admissible differential pressure
(For temperatures of up to 120°C)

For temperatures of 120°C and above: obey application limits !

p/p- und i/p-Stellungsregler, Typ 8047

Disc-pair: carbon - stainless steel coated
SFC - stainless steel coated

DN	actuator	max. differential pressures Regelung	max. differential pressures on/off	pilot pressures
15	80	40	40	3,0 - 6
20	80	39,8	36,6	3,5 - 6
25	80	29,5	30,7	3,5 - 6
32	80	21,8	25,1	4,0 - 6
40	80	14,9	19	4,0 - 6
50	80	8,8	12,5	4,5 - 6
65	80	7,2	10,5	4,5 - 6
80	80	4,4	6,7	4,5 - 6
100	80	2,7	4,3	4,5 - 6
15	125	40	40	3,0 - 6
20	125	40	40	3,0 - 6
25	125	40	40	3,0- 6
32	125	40	40	3,0 - 6
40	125	34,3	40	3,0 - 6
50	125	20,4	27,1	3,5 - 6
65	125	16,7	22,8	3,5 - 6
80	125	10,1	14,5	3,5 - 6
100	125	6,2	9,3	3,5 - 6
125	125	4,2	6,3	3,5 - 6
150	125	3,1	4,7	3,5 - 6

Disc pair: STN2

DN	actuator	max.differential pressures Regelung	max.differential pressures on/off	pilot pressures
15	80	28,4	29,9	3,5 - 6
20	80	19,3	23	4,0 - 6
25	80	13,1	17,2	4,0 - 6
32	80	9,1	12,8	4,0 - 6
40	80	5,9	8,8	4,0 - 6
50	80	3,4	5,3	4,5 - 6
65	80	2,7	4,3	4,5 - 6
80	80	-	-	-
100	80	-	-	-
15	125	40	40	3,0 - 6
20	125	40	40	3,0 - 6
25	125	30,2	37,4	3,0 - 6
32	125	21	27,8	3,0 - 6
40	125	13,7	19,1	3,0 - 6
50	125	7,8	11,4	3,5 - 6
65	125	6,3	9,4	3,5 - 6
80	125	3,7	5,7	3,5 - 6
100	125	2,3	3,5	3,5 - 6

Admissible differential pressure
(For temperatures of up to 120°C)

For temperatures of 120°C and above: obey application limits !

Actuator D80 double acting
without safety position
digital positioner, type 8049-4 wire

DN	actuator	max.differential pressures control, on/off	pilot pressures
15	80	40	3,5 - 6
20	80	37,3	4,0 - 6
25	80	27,4	4,0 - 6
32	80	20,1	4,5 - 6
40	80	13,6	4,5 - 6
50	80	8	5,0 - 6
65	80	6,6	5,0 - 6
80	80	4	5,0 - 6
100	80	2,4	5,0 - 6

Actuator D125 double acting
without safety position
digital positioner, type 8049-4 wire

DN	actuator	max.differential pressures control, on/off	pilot pressures
15	125	40	3,0 - 6
20	125	40	3,0 - 6
25	125	40	3,0 - 6
32	125	40	3,5 - 6
40	125	27	3,5 - 6
50	125	18,5	4,0 - 6
65	125	15,1	4,0 - 6
80	125	9,1	4,0 - 6
100	125	5,6	4,0 - 6
125	125	3,8	4,0 - 6
150	125	2,8	4,0 - 6

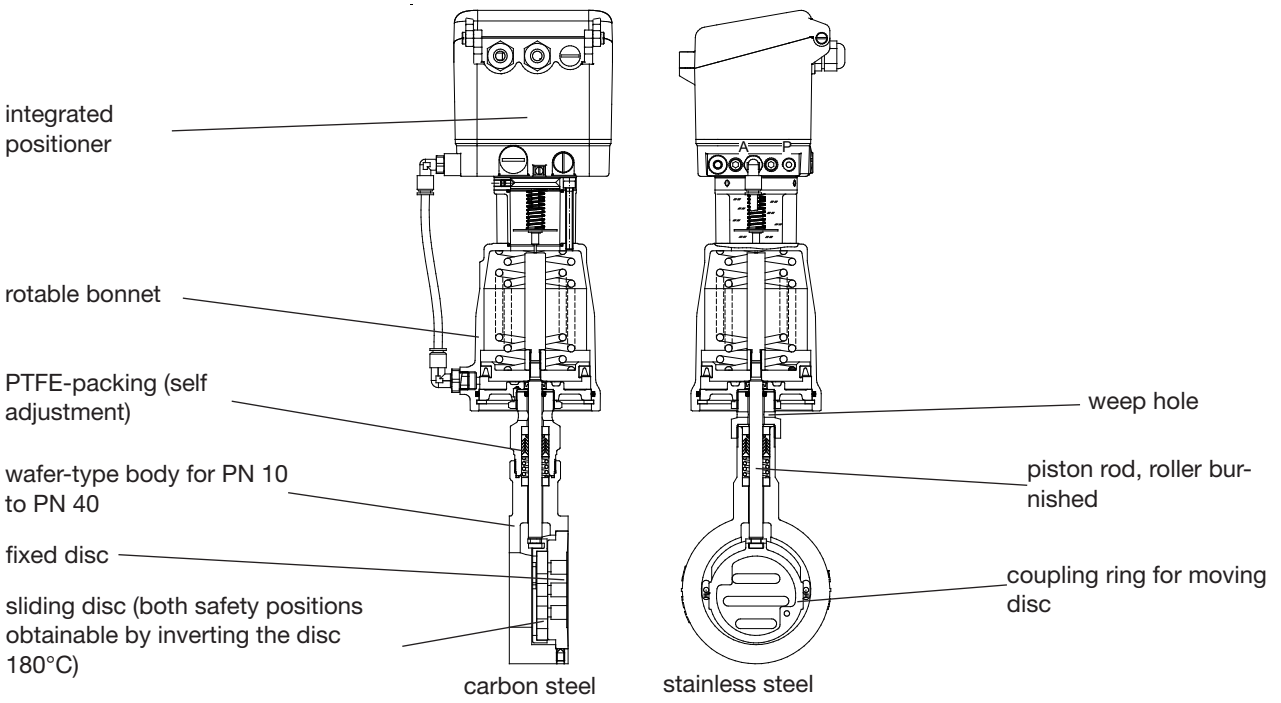

Applications limits for GS1-Valves

PN 40

DN	Sliding unit: carbon/SFC - stainless steel, coated max. adm. diff. pressures for GS1-valves				Sliding unit: STN2 max. adm. diff. pressures for GS1-valves			
	100°C	150°C	200°C	230°C	100°C	150°C	200°C	230°C
15 - 25	40	36	31	30	40	36	31	30
32	40	36	31	30	40	36	31	30
40	40	36	31	30	27	26	24	21
50	40	36	31	30	40	36	31	30
65	40	36	31	30	38	36	31	30
80	40	36	31	30	22	21	20	17,5
100	25	24	22	20	13,5	12,5	12,0	10,5
125	16,5	15,5	15	13,5	8,9	8,4	8,0	7,0
150	16	16	16	16	11	10,5	9,8	8,6

Ordering Number System

1	2	3	4	5	6	7	8	9	10	11	12	13	14	15	16
8	0	4	4	/				V	E				M							Z			S

1 - 5 : Please quote all 5 sections
6 - 12: Quote only if required

Type — Size — Symbol: "V": Valve; "R": Repair kit (sealings)

1.	Type	2.	Connection	3.	Body material	4.	Safety position	5.	Actuator	6.	Special versions	7.	Springs	8.	Stem sealing
E	Sliding gate valve, short version (type 8044)	0	fangeless wafertype construction for flanges acc. DIN 2632-2635 (PN10-PN40)	0	carbon steel 1.0619	0	spring closes	1	piston 80 mm	M	state, if further sections are quoted	-	standard	-	PTFE-packing, self adjusting (standard)
				1	stainless steel 1.4408	1	spring opens	2	piston 125 mm			D	double acting, without springs		
				2	carbon steel 1.0619 reduced design	-	without								
				3	stainless steel 1.4408 reduced design										

9.	Moving disc	10.	Fixed disc	11.	Kvs-values	12.	Characteristic	13.	Accessories	14.	Positioner	15.	Special versions	16.	Further special versions
-	carbon material	-	stainless steel 1.4571, coated	-	100% (Stand.)	-	linear	Z	Accessories	2	p/p-positioner Type 8047 + pos.indic.	1	fittings and tubing made from PA	S	further special versions
9	STN2/ STN3-disc	1	STN2-disc (only in combination with pos. „9“)	A	red. to 63%	1	equal percentage			3	i/p-positioner Type 8047 + pos.indic.	E	fittings and tubing made of stainless steel		
S	SFC-disc	3	STN3-disc (only in combination with pos. „9“)	1	red. to 40%					5	i/p-positioner Type 8047 + pos.indic. Eex ibII CT6, with plug conn. M12x1				
				B	red. to 25%					8	i/p-positioner Type 8047 + pos.indic. plug conn. M12x1				
				2	red. to 16%					C	digital positioner Type 8049, 4-wire				
				C	red. to 10%					R	digital positioner Type 8049, 2-wire				
				3	red. to 6,3%					W	digital positioner Type 8049 ExPro, ATEX, IECEX				
				4	red. to 2,5%					K	digital positioner type 8049 ExPro-FM with base plate in stainless steel; Ta = -10°C to +75°C; IS Class I Division 1, Groups A, B, C, D; T4 Entity; Class I Zone 0 AEx ia IIC T4 Entity, IP65				
				5	red. to 1%					N	digital positioner Type 8049 IO-Link version				
				6	red. to 20 %					Y	digital positioner type 8049 ExPro-FM with base plate in stainless steel; Ta = -10°C to +75°C; NI Class I Division 2, Groups A, B, C, D; T4 NIFW, IP65				
				7	red. to 12%										
				8	red. to 2%										
				9	red. to 0,4%										

Ordering example: 8044/050VE0101M - - - - 2-ZC
Sliding gate valve type 8044, short design, DN 50, PN 10/40, body stainless steel, spring closes, actuator 80 mm, PTFE-V-shaped sealing rings, moving disc carbon material, fixed disc stainless steel, Kvs-value 16% (red.) seat characteristic linear, digital positioner Type 8049 4-wire

Dimensions and Weights

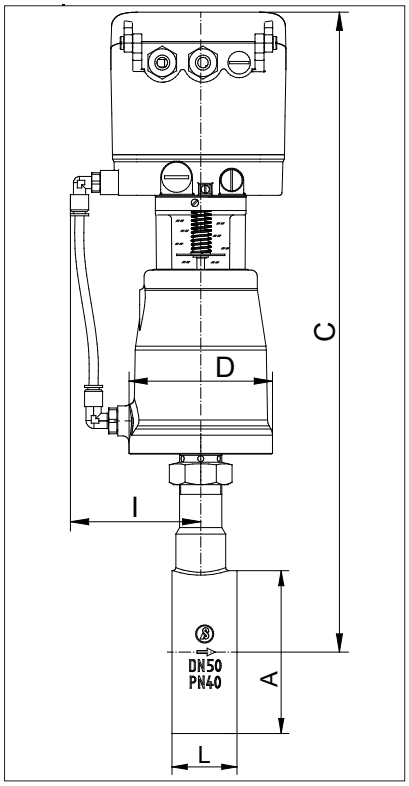

Type 8044 with digital positioner
Type 8049
with position indicator

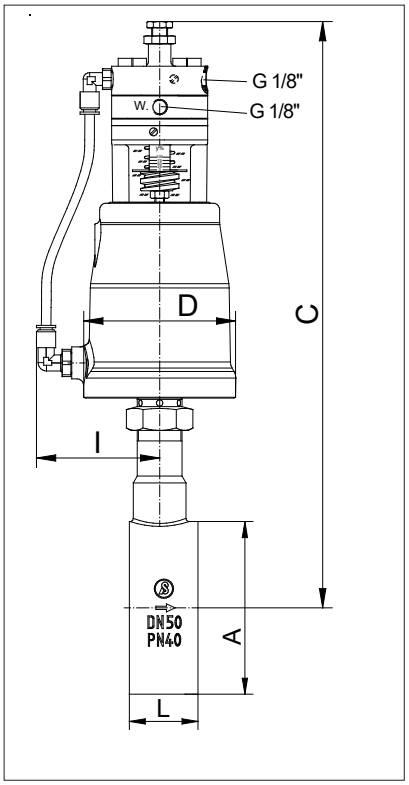

Type 8044 with p/p-positioner
Type 8047
with position indicator

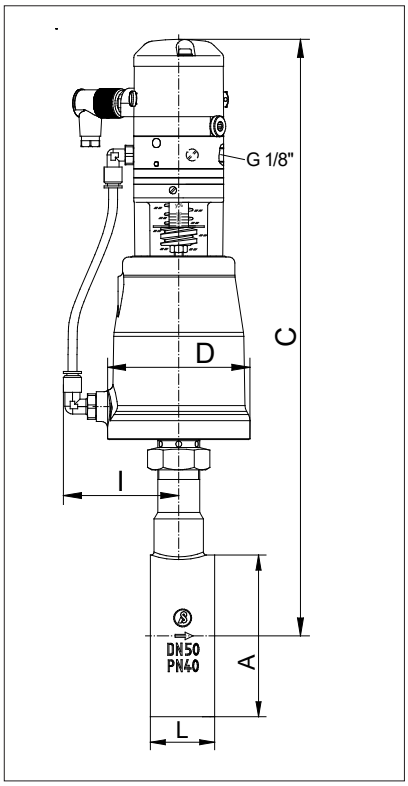

Type 8044 with i/p-positioner
Type 8047
with positioner indicator

DN	Actuator Ø	A	L	D	I	C carbon steel p/p positioner	C carbon steel i/p positioner	C carbon steel digital positioner	C stainless steel body p/p positioner	C stainless steel body i/p positioner	C stainless steel body digital positioner	Stroke H	Weight (kg)
15	80	53	33	96	80	349	381	406	236	358	383	6	4,9
15	125	53	33	146	105	369	401	426	346	378	403	6	6,7
20	80	62	33	96	80	354	386	411	331	363	388	6	5
20	125	62	33	146	105	374	406	431	351	383	408	6	6,8
25	80	72	33	96	80	359	391	415	336	368	393	6	5,1
25	125	72	33	146	105	379	411	436	356	388	413	6	6,9
32	80	82	33	96	80	362	394	419	340	372	397	6	5,1
32	125	82	33	146	105	382	414	439	360	392	417	6	6,9
40	80	92	33	96	80	367	399	424	345	377	402	6	5,3
40	125	92	33	146	105	387	419	444	365	402	422	6	7,1
50	80	108	43	96	80	368	400	425	368	400	425	8	6,4
50	125	108	43	146	105	388	420	445	388	420	445	8	8,2
65	80	126	46	96	80	377	409	434	377	409	434	8	6,9
65	125	126	46	146	105	397	429	454	397	429	454	8	8,7
80	80	142	46	96	80	385	417	442	385	417	442	8	7,6
80	125	142	46	146	105	405	427	462	405	427	462	8	9,4
100	80	164	52	96	80	398	430	455	398	430	455	8,5	8,8
100	125	164	52	146	105	418	450	475	418	450	475	8,5	10,6
125	80	194	56	96	80	419	451	476	419	451	476	8,5	10,6
125	125	194	56	146	105	439	471	496	439	471	496	8,5	12
150	80	219	56	96	80	465	497	522	465	497	522	8,5	12,5
150	125	219	56	146	105	485	517	542	485	517	542	8,5	13,9

Dimension C „reduced design“ shortened by 25,4 mm

Dimensions in mm

Text and pictures are not binding. We reserve the right, to alter the equipment.