Low flow valve 7045

DN8, DN15; PN320

Valve for small and very small flow rates with manual operation for shutting off and regulating liquids and gases for industrial applications



- Small and very small Kvs values
- High differential pressures up to 320 bar
- Metallic sealing seat assembly made of stainless steel or carbide
- Metallic body seal

Technical data valve

Nominal Size	DN8, DN15	
Connection	Pipe thread acc. ISO 228-1 NPT thread acc. ANSI B1.20.1 Socket Weld	
Nominal pressure	PN 320	
Fluid temperature	Standard version HT530-version Low-temperature version 1 Low-temperature version 2	-20°C up to +210°C -20°C up to +530°C -40°C up to +160°C -100°C up to +210°C
Leakage	EN 60534-4 EN 12266-1	IV F

Materials

Body	1.4404	
Head section	1.4404	
Head section seal	1.4404	
Actuating stem	1.4571	
Packing	PTFE and PEEK Compound	
Needle	1.4404	Hardmetal
Seat	1.4404	Hardmetal
Actuator	Stainless steel	

KVS-values

Characteristic: linear			
DN8		DN15	
KVS	rangeability	KVS	rangeability
0,17	30:1	1,3	40:1
0,11	30:1	1,0	40:1
0,068	30:1	0,68	40:1
0,043	30:1	0,43	40:1
0,027	30:1	0,27	30:1
0,017	30:1	0,17	30:1
0,011	25:1	0,11	30:1
0,007	25:1	0,068	30:1
0,004	25:1	0,043	30:1
0,003	25:1	0,027	30:1
		0,017	30:1
		0,011	25:1
		0,007	25:1
		0,004	25:1
		0,003	25:1

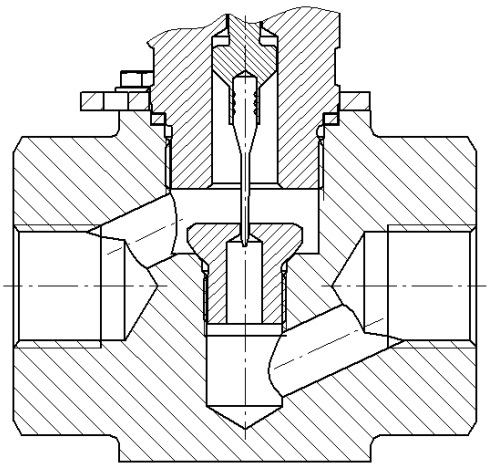

Schubert & Salzer Control Systems GmbH, Bunsenstr. 38, 85053 Ingolstadt, Tel: +49 (0)841-9654 0, Fax: +49 (0)841 9654 590
info.cs@schubert-salzer.com, www.schubert-salzer.com

Low flow valve 7045

Admissible pressures

DN08 - p1 as a function of p2

	KVS values	Seat relief	p2 [bar] 0	20	50	100	150	200	250	300	320
p1 [bar]	0,043-0,17	275 N	177	169	159	140					
		520 N	320	320	320	320	320	320	320	320	320
	0,0027-0,027	275 N	320	320	320	303					
		175 N	295	206	73						

DN15 - p1 as a function of p2

	KVS values	Seat relief	p2 [bar] 0	20	50	100	150	200	250	300	320
p1 [bar]	1,0 - 1,3	1540 N	233	233	233	233	233	233			
		925 N	130	130	130	130					
	0,27 - 0,68	925 N	320	319	313	302	292	281	271		
		520 N	158	154	148	137					
	0,043 - 0,17	520 N	320	320	320	218					
		275 N	177	129	59						
	0,0027 - 0,027	275 N	320	320	126						
		175 N	295	46							

Operating limits

Material trim Needle	Material trim Seat	Temperature	max. differential pressure [bar] Liquid	Gas
1.4404	1.4404	T ≤ 100°C	100	320
		T > 100°C	40	160
Hardmetal	Hardmetal	-	200	320

Pressure-temperature rating

Standard version T [°C]	Standard version PS [bar]	HT530-version T [°C]	HT530-version PS [bar]
-60 bis +120	320	250	254
150	301	300	238
200	274	400	226
210	270	450	216
		500	206
		530	200

Low flow valve 7045

Dimensions and weights

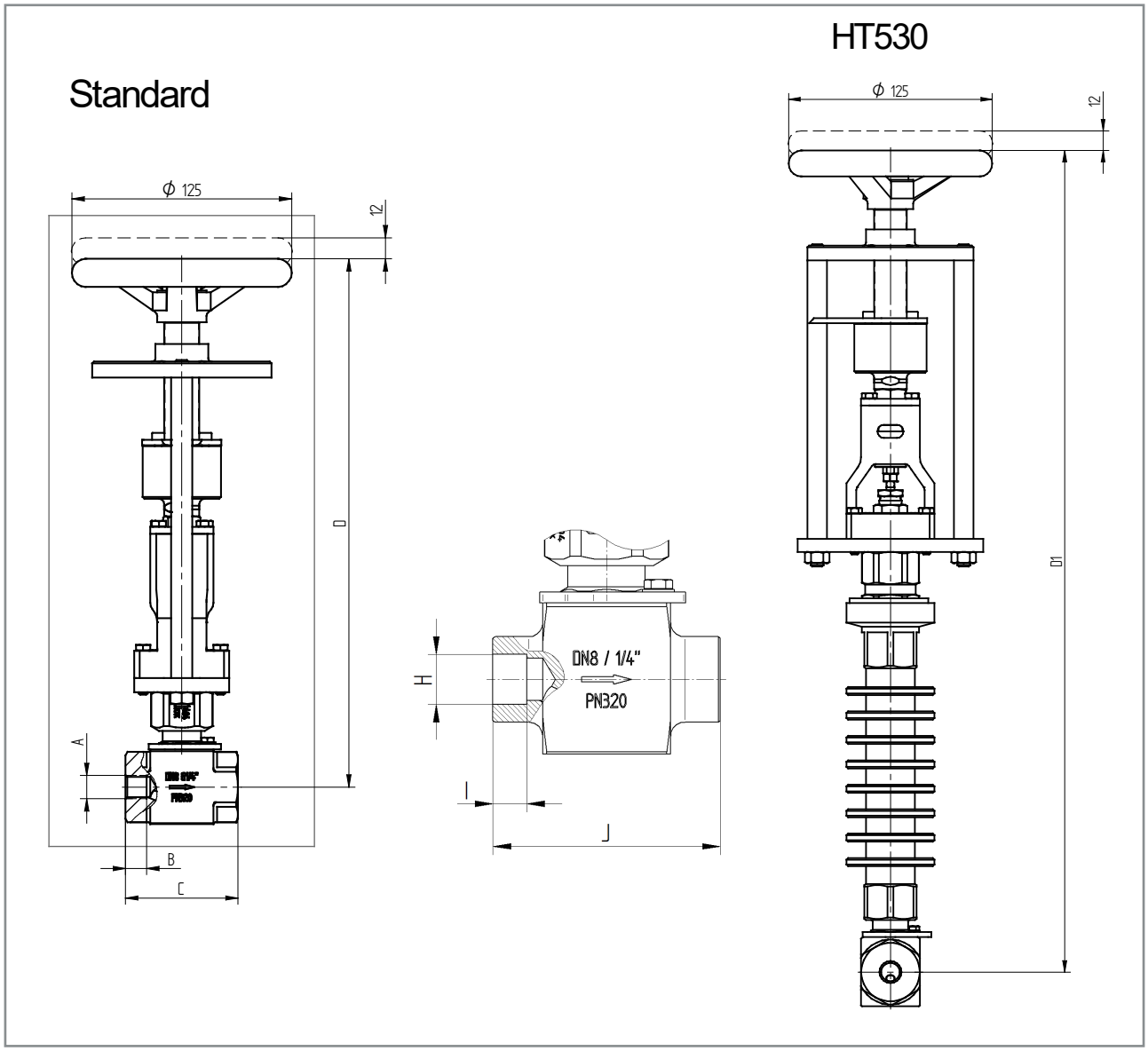

Nominal Size	G-thread connection A	G-thread connection B	NPT-thread connection A	NPT-thread connection B	C	Standard version D	Standard version Weight [kg]	HT530 D1	HT530 Weight [kg]	Stroke
DN08	G 1/4“	12	NPT 1/4“	10	64	301	4,2	504	5,8	12
DN15	G 1/2“	15	NPT 1/2“	14	79	307	4,9	511	6,6	12

Dimensions in mm

Size	Socket weld connection H	Socket weld connection I	J
DN08	14	9,53	64
DN15	21,7	12,7	79

Dimensions in mm

Text and pictures are not binding. We reserve the right, to alter the equipment.