# Low flow valve 7042

SCHUBERT SALZER

**Valve for low and ultra-low flow rates optionally with integrated positioner for shutting off and controlling liquid and gaseous fluids for industrial applications**

- Very small Kvs-values
- High differential pressures up to 320 bar
- Trim made of stainless steel or carbide
- Metallic body seal



## Technical data

| | | |
|---|---|---|
| Nominal Size | DN8, DN15 | |
| Connection | Pipe thread acc. ISO 228-1<br>NPT thread acc. ANSI B1.20.1 | |
| Nominal pressure | PN 320 | |
| Fluid temperature | Standard version<br>HT530-version<br>Low-temperature version 1<br>Low-temperature version 2 | -20°C up to +210°C<br>-20°C up to +530°C<br>-40°C up to +160°C<br>-100°C up to +210°C |
| Ambient temperature | with digital positioner type 8049<br>without positioner | -10°C up to +75°C<br>-20°C up to +80°C |
| Leakage | EN 60534-4<br>EN 12266-1 | IV<br>F |

## Materials

| | | |
|---|---|---|
| Body | 1.4404 | |
| Head section | 1.4404 | |
| Head section seal | 1.4404 | |
| Actuating stem | 1.4571 | |
| Packing | PTFE and PEEK Compound | |
| Needle | 1.4404 | Hardmetal |
| Seat | 1.4404 | Hardmetal |
| Diaphragm housing | Aluminium cathodic dip coated | |
| Actuator spring | Spring 1: 1.4310<br>Spring 2: Spring steel cathodic dip coated | |

## Kvs-values

| Characteristic: linear | | | |
|---|---|---|---|
| DN8 | | DN15 | |
| KVS | rangeability | KVS | rangeability |
| 0,17 | 30:1 | 1,3 | 40:1 |
| 0,11 | 30:1 | 1,0 | 40:1 |
| 0,068 | 30:1 | 0,68 | 40:1 |
| 0,043 | 30:1 | 0,43 | 40:1 |
| 0,027 | 30:1 | 0,27 | 30:1 |
| 0,017 | 30:1 | 0,17 | 30:1 |
| 0,011 | 25:1 | 0,11 | 30:1 |
| 0,0068 | 25:1 | 0,068 | 30:1 |
| 0,0043 | 25:1 | 0,043 | 30:1 |
| 0,0027 | 25:1 | 0,027 | 30:1 |
| | | 0,017 | 30:1 |
| | | 0,011 | 25:1 |
| | | 0,0068 | 25:1 |
| | | 0,0043 | 25:1 |
| | | 0,0027 | 25:1 |

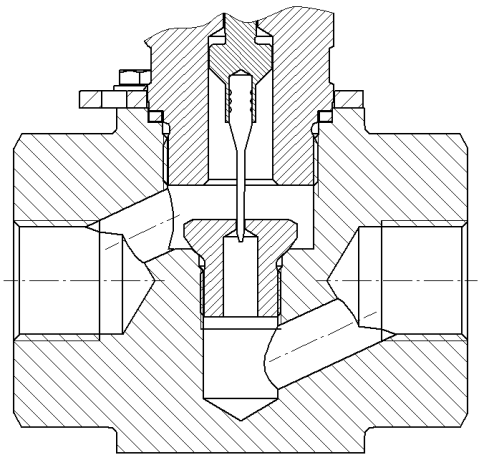

**Schubert & Salzer Control Systems GmbH**, Bunsenstr. 38, 85053 Ingolstadt, Tel: +49 (0)841-9654 0, Fax: +49 (0)841 9654 590
info.cs@schubert-salzer.com, www.schubert-salzer.com

# Low flow valve 7042

## Operating limits

| Material trim | | Tempera-ture | max. differential pressure [bar] | |
|---|---|---|---|---|
| Needle | Seat | | Liquid | Gas |
| 1.4404 | 1.4404 | T ≤ 100°C | 100 | 320 |
| | | T > 100°C | 40 | 160 |
| Hardmetal | Hardmetal | - | 200 | 320 |

## Admissible differential pressures (spring closes)

| Size | KVS-Value | differential pressure [bar] for spring pressure range of the actuator | | | | | | | |
|---|---|---|---|---|---|---|---|---|---|
| | | spring 1 | | | | | | spring 2 | |
| | | 0,2 - 1,0 bar | 0,3 - 1,1 bar | 0,4 - 1,2 bar | 0,6 - 1,4 bar | 0,8 - 1,6 bar | 1,0 - 1,8 bar | 1,4 - 2,4 bar | 1,8 - 2,8 bar |
| DN08* | 0,043 - 0,17 | 63 | 161 | 260 | 320 | 320 | - | - | - |
| | 0,0027 - 0,027 | 292 | 320 | 320 | - | - | - | - | - |
| DN15 | 1,0 - 1,3 | 2,1 | 19 | 33 | 63 | 92 | 121 | 179 | 238 |
| | 0,27 - 0,68 | 17,5 | 53 | 88 | 160 | 231 | 302 | 320 | 320 |
| | 0,043 - 0,17 | 63 | 161 | 260 | 320 | 320 | - | - | - |
| | 0,0027 - 0,027 | 292 | 320 | 320 | - | - | - | - | - |
| required supply pressure | | 1,1 - 6 bar | 1,2 - 6 bar | 1,3 - 6 bar | 1,5 - 6 bar | 1,7 - 6 bar | 1,9 - 6 bar | 2,7 - 6 bar | 3,1 - 6 bar |

*For HT version pressure values of DN15

For values of P2 > 0 the admissible differential pressures may differ considerably.
Therefore the sizing should generally be verified by the manufacturer.

## Admissible differential pressures (spring opens)

| Size | KVS-Value | max. operating pressure [bar] | Supply pressure [bar] at actual differntial pressure [bar] | | | | | | | supply pressure max [bar] |
|---|---|---|---|---|---|---|---|---|---|---|
| | | | Δp: <25 | Δp: 25 - 50 | Δp: 50 - 75 | Δp: 75 - 100 | Δp: 100 - 150 | Δp: 150 - 200 | Δp: 200 - 320 | |
| DN08 | 0,043 - 0,17 | 320 | 1,2 | 1,2 | 1,2 | 1,3 | 1,3 | 1,4 | 1,5 | 1,5 |
| | 0,0027 - 0,027 | 320 | 1,2 | 1,2 | 1,2 | 1,2 | 1,2 | 1,2 | 1,2 | 1,3 |
| DN15 | 1,0 - 1,3 | 116 | 1,4 | 1,6 | 1,8 | 1,9 | - | - | - | 2,1 |
| | 0,27 - 0,68 | 197 | 1,3 | 1,4 | 1,4 | 1,5 | 1,6 | - | - | 1,8 |
| | 0,043 - 0,17 | 320 | 1,2 | 1,2 | 1,2 | 1,3 | 1,3 | 1,4 | 1,5 | 1,6 |
| | 0,0027 - 0,027 | 320 | 1,2 | 1,2 | 1,2 | 1,2 | 1,2 | 1,2 | 1,2 | 1,4 |

For values of P2 > 0 the admissible differential pressures may differ considerably.
Therefore the sizing should generally be verified by the manufacturer.
The specified supply pressures may only be exceeded by 0,1 bar to prevent damages to the trim.

## Pressure-temperature-rating

| T [°C] | PS [bar] |
|---|---|
| -60 up to +120 | 320 |
| 150 | 301 |
| 200 | 274 |
| 210 | 270 |
| 250 | 254 |
| 300 | 238 |
| 400 | 226 |
| 450 | 216 |
| 500 | 206 |
| 530 | 200 |

## Dimensions and weights

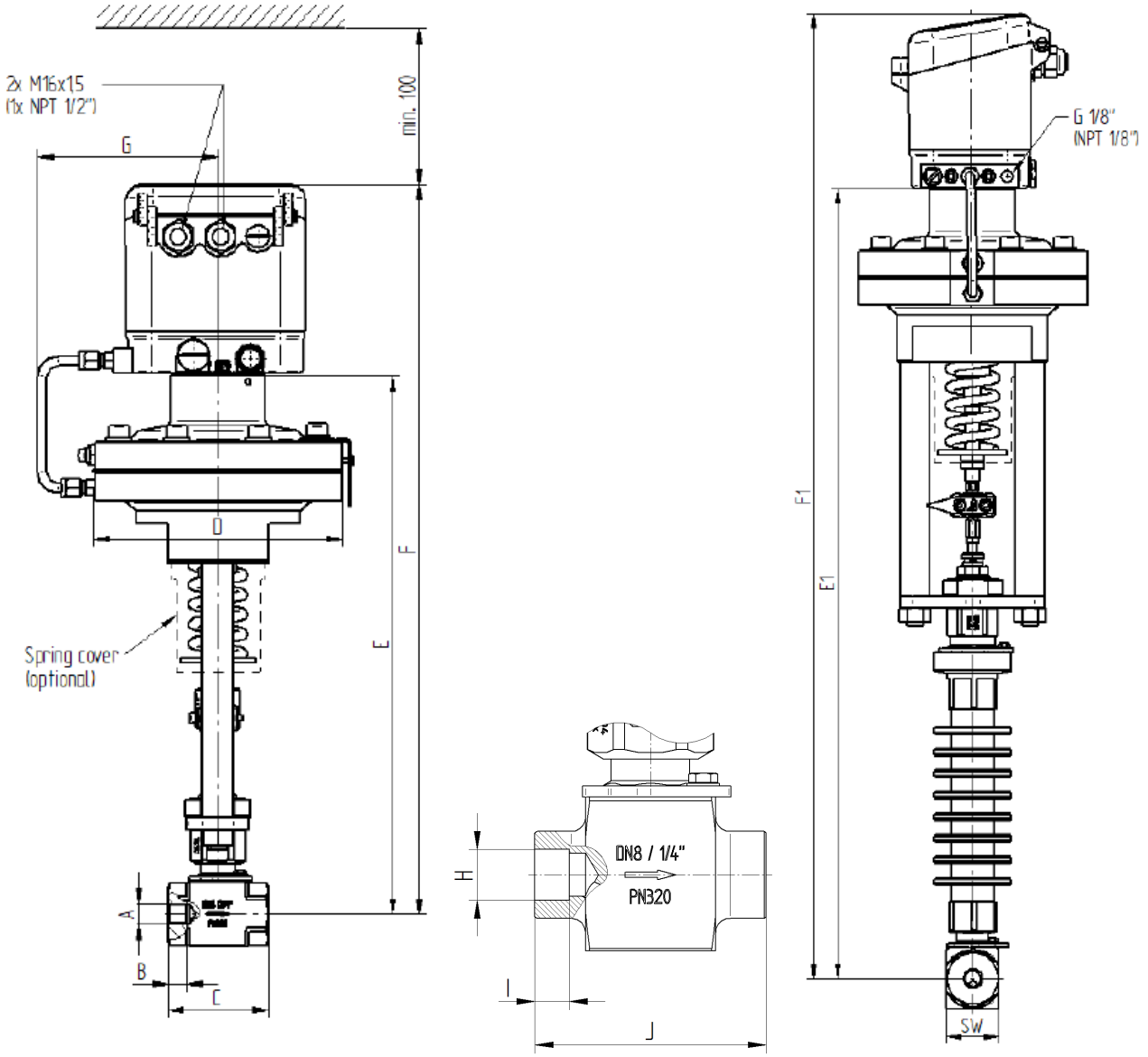


| Size | Function | Connection NPT-thread | | Connection G-thread | | C | D | E | E1 | F | F1 | G | weight [kg] | |
|---|---|---|---|---|---|---|---|---|---|---|---|---|---|---|
| | | A | B | A | B | | | | | | | | standard | HT530 |
| DN08 | NC | G 1/4“ | 12 | G 1/4“ | 10 | 64 | 159 | 345 | 550 | 468 | 670 | 120 | 7 | 8,6 |
| DN08 | NO | G 1/4“ | 12 | G 1/4“ | 10 | 64 | 159 | 377 | 582 | 500 | 705 | 120 | 7,4 | 9 |
| DN15 | NC | G 1/2“ | 15 | G 1/2“ | 14 | 79 | 159 | 352 | 557 | 474 | 679 | 120 | 7,6 | 9,2 |
| DN15 | NO | G 1/2“ | 15 | G 1/2“ | 14 | 79 | 159 | 384 | 589 | 506 | 711 | 120 | 8 | 9,6 |

Dimensions in mm

| Size | Socket weld connection | | |
|---|---|---|---|
| | H | I | J |
| DN08 | 14 | 9,53 | 64 |
| DN15 | 21,7 | 12,7 | 79 |

Dimensions in mm

Text and pictures are not binding. We reserve the right, to alter the equipment.