Adjustable Sliding Gate orifice 8090

Series GS3 - DN15 to DN250

Continuously adjustable sliding gate orifice plate for precise adjustment of a defined flow rate.



- Infinitely adjustable in the built-in status
- Manual adjustment with safety device
- Optional sealable
- Defined characteristic curve
- Stops at the end positions
- Space-saving intermediate flange construction
- Very light weight
- Insensitive to cavitation
- Meets the requirements of TA-Luft 2021

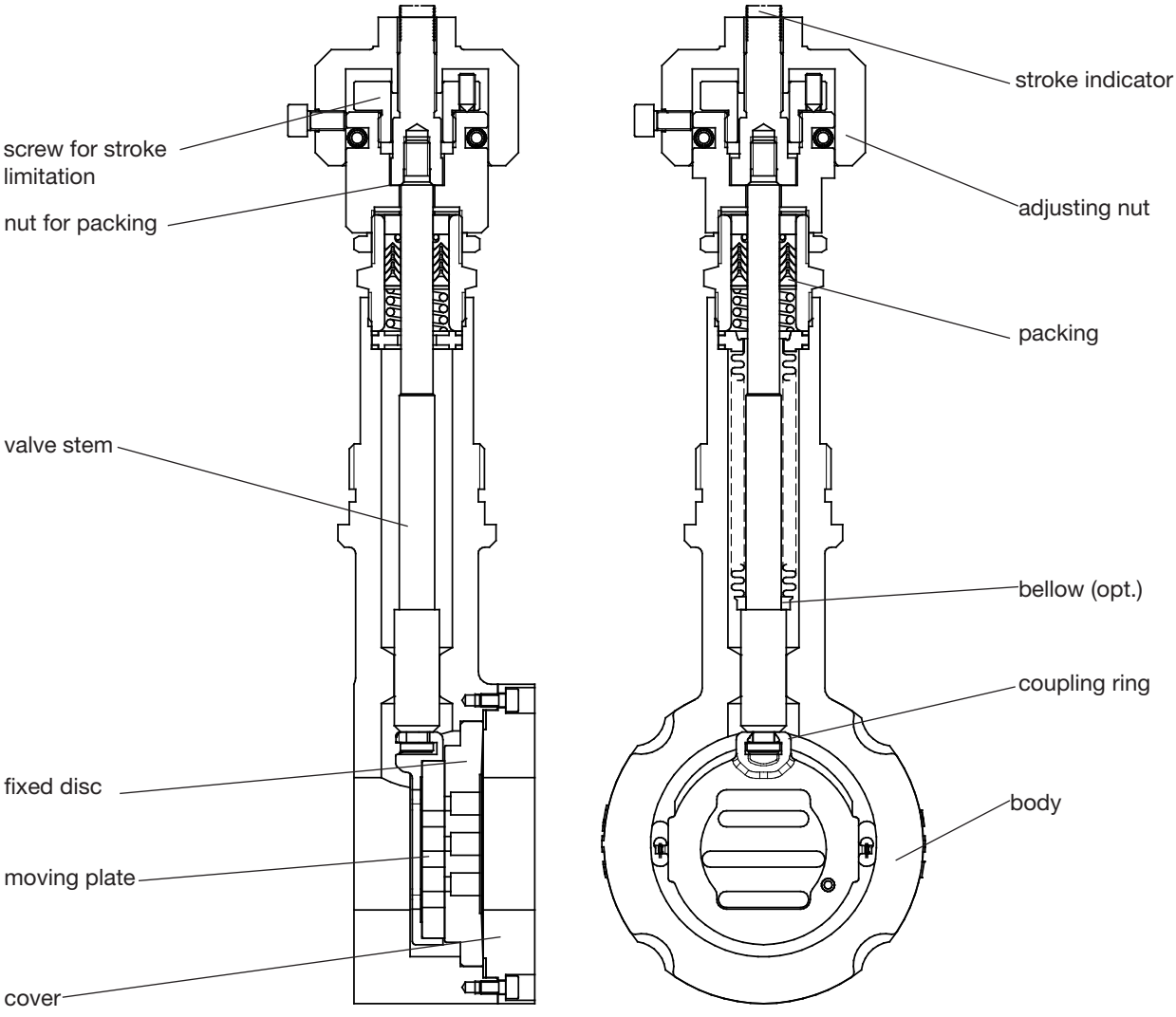

Schubert & Salzer Control Systems GmbH, Bunsenstr. 38, 85053 Ingolstadt, Tel: +49 (0)841-9654 0, Fax: +49 (0)841 9654 590
info.cs@schubert-salzer.com, www.schubert-salzer.com

Adjustable Sliding Gate orifice 8090

SCHUBERT SALZER

Technical information

Body design	wafer-type design for flanges acc. DIN EN 1092-1 Form B or ASME B16.5 RF further versions see data sheet 8090-GS1	
Nominal sizes	DN 15 to DN 250	
Nominal pressure acc. DIN 2401	PN 40 (fits also to PN 10-25)	DN 15 - DN 150
	PN 100	DN 15 - DN 80
	PN 16	DN 200 - DN 250
Nominal pressure acc. ANSI	ANSI 150	DN15 - DN 250
	ANSI 300	DN 15 - DN 150
	ANSI 600	DN 15 - DN 80
Media temperature	Versions from -60°C up to +350°C	
Flange gaskets (customer side)	DIN EN 1514-1 or ANSI B16.21 in the respective nominal pressure rating	
Packing leakage	tested according to TA-Luft as defined in DIN EN ISO 15848-1 and VDI 2440	
Ambient temperature	From -30°C to +140°C	

Application limits

Rating	PN40	PN 16	PN 100	ANSI 150	ANSI 300	ANSI 600
Body material cpl. stainless steel						
Tmin [°C]	-60	-60	-60	-29	-29	-29
Tmax [°C]	350	350	350	350	350	350
Body material carbon steel with stainless steel body cover						
Tmin [°C]	-60	-60	-10	-20	-20	-20
Tmax [°C]	350	350	350	350	350	350

Materials

Body	Stainless steel 1.4408	Carbon steel 1.0619
Bodycover	Stainless steel 1.4404 or 316L	
Packing	PTFE (Carbon filled), spring 1.4310	
Actuating stem	Stainless steel 1.4571, roller burnished	
Bellows	Stainless steel 1.4571	
Fixed disc	Stainless steel 1.4571, coated	STN2-disc
Sliding disc	Special carbon material	STN2-disc
Guide ring for sliding disc	Stainless steel 1.4571	

Admissible Differential Pressure

DN	carbon/SFC-stain-less steel	STN2
	max. differential pressures	
	bar	bar
15	102,1	102,1
20	102,1	102,1
25	88 (102,1)*	88 (102,1)*
32	102,1	102,1
40	88 (102,1)*	72
50	102,1	77
65	80	62
80	48	36
100	33	33
125	23	22
150	16	16
200	16	9
250	10,5	5,5

*figures in brackets for bodys made of carbon steel

	Upper limits für admissible pressures in bar					
	PN16	PN40	PN100	ANSI150	ANSI300	ANSI600
P max. carbon steel	16	40	100	19,6	51,1	102,1
P max. stainless steel				19	49,6	99,3

Adjustable Sliding Gate orifice 8090

SCHUBERT SALZER

Ordering number system

1	2	3	4	5	6	7	8	9	10	11...16
8	0	9	0	/				V	B					M					

Type: 8090 — Size: / — Symbol: "V": Valve; "R": Repair kit (sealings)

1 - 5 : Please quote all 5 sections.
6 - 16: Quote only if required.

1. Type		2. Connection		3. Body material		4.		5. Actuator		6. Special versions	
B	Adjustable GS orifice 8090 (long version)	E	GS3-flangeless design acc. ANSI 150	0	C-steel 1.0619	-	without significance	A	manually operated	M	special versions (Pos. 7-17)
		F	GS3-flangeless design acc. ANSI 300							A	nut and nut acc. DIN EN1092-1
		G	GS3-flangeless design acc. DIN, PN10-PN40, (DN200: PN16; DN250: PN10-PN16)	1	stainless steel 1.4408					C	nut and tongue acc. DIN EN1092-1
		H	GS3-flangeless design acc. DIN, PN100							E	2x lowered face acc. DIN EN1092-1
		K	GS3 flangeless design acc. ANSI 600							H	lowered and raised face acc. DIN EN1092-1
		N	GS3-flangeless design acc. JIS-20K (suitable f. JIS-16K/-10K, DN50 only in JIS-10K)								

7.		8. Stem sealing		9. Moving valve disc		10. Fixed valve disc		11. Kvs-values		12. Flow characteristic	
-	without significance	-	PTFE-packing, self adjusting (standard)	-	carbon material	-	standard coating	-	100 % (Stand.)	-	linear
		1	additional bellows 1.4571	9	STN2/STN3	1 3	STN2 STN3	S	Special-Kvs-value	1	equal%
		7	Pack for lower temperatures, down to -60°C	T	HMC	3	STN3				
				H	hardmetal	H	hardmetal (solid material KR16)				

Ordering example:	8090/015VB00AM--91--Z-1 Adjustable GS orifice, DN 15 (Kvs 4; Cv 4,6), long verion, GS3-flangeless design acc. DIN, PN10-PN40, body material carbon steel, stem sealing PTFE-packing, pair of sealing discs: STN2/STN3, characteristic linear 100%, additional locking nut

Optional with locking nut and locking plate

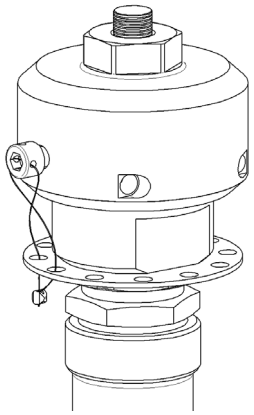

Dimensions and weights

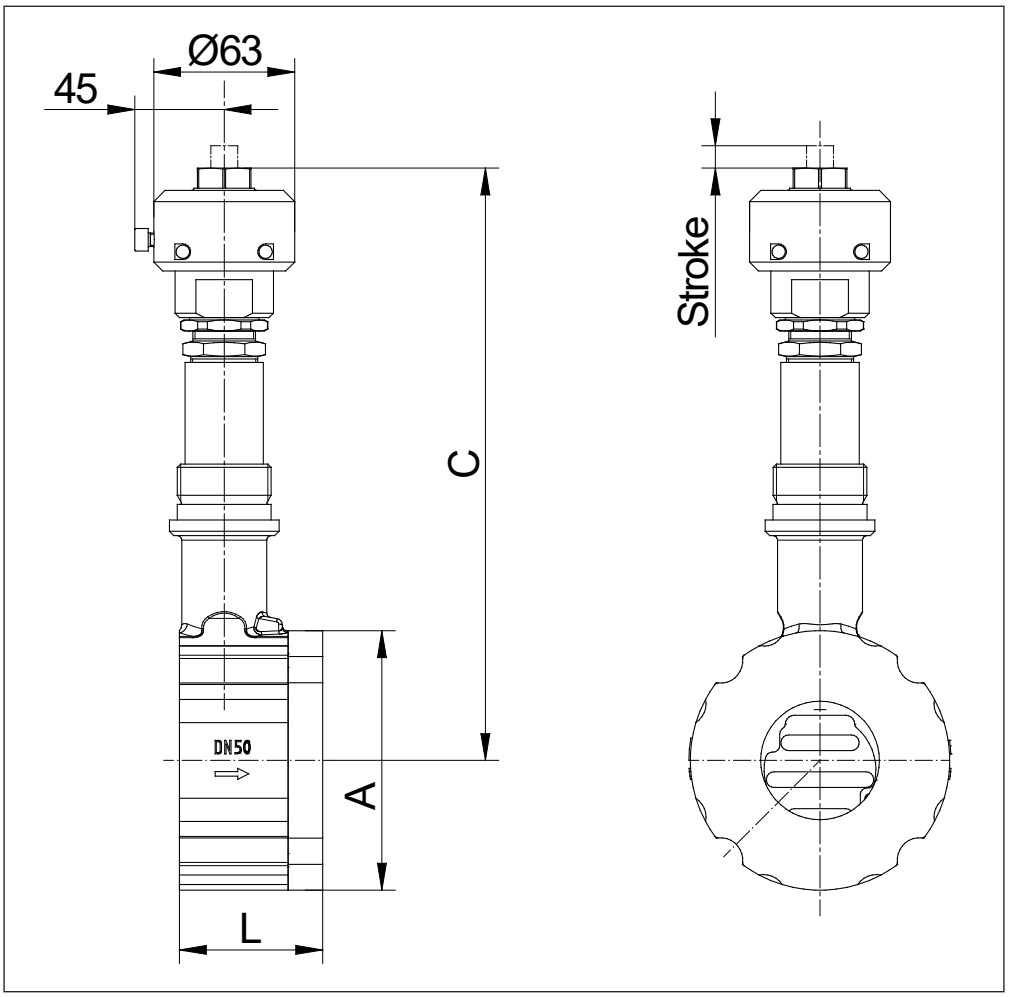

DN	A	C max	L	Weight kg	Stroke H
15	64	236	56	5,1	5,2
20	72	241	56	5,3	4,7
25	82	246	56	5,6	4,7
32	89	251	56	5,8	4,7
40	99	256	56	6	4,7
50	116	266	64	7,4	6,7
65	138	276	68	8,8	6,7
80	153	286	70	10	6,7
100	184	296	75	12,8	7,2
125	212	311	80	14,6	7,2
150	242	326	80	18,2	6,7
200	302	356	93	33,7	6,7
250	360	381	96	38,2	6,7

dimensions in mm