Three-Way Ball Sector Valve 4083

DN 50 up to DN 150

Three-way ball sector valve with motorised actuator in split function or mixing function for regulating neutral and aggressive media.



- High KVs-Values
- Excellent control characteristics
- High control spread
- High rangeability 100:1
- DN 50 up to DN 150
- Variable installation options
- Easy maintenance
- Suitable for liquids and gases

Technical Information Valve

Nominal sizes	DN 50 up to DN 150	
Connection	Flanges according to DIN EN 1092-1	
Total length	according to DIN EN 558-1 series 1	
Body material cast parts turned parts	1.4408 (CF8M) 1.4404 (316L)	
Material of the bearing shaft	1.4122	
Bearing material	high temperature plain bearing	
Connection to the actuator	mounting kit DIN/ISO 5211	
Nominal pressure DN 50 DN 65 - DN150	PN40 PN25	
Fluid Temperature	-40°C up to +220°C	depending on the sealings
Ambient temperature	-20°C up to +80°C special version on request	depending on the sealings
Vacuum	up to 50 mbar abs.	
Characteristic	almost equal percentage	
Rangeability	100:1	
Leakage rate % of Kvs IEC 60534-4	Seat ring: PTFE / PEEK Ball sector: Polished stainless steel < 0,00005 IV-S1	

Technical Information Actuator

Nominal Sizes	DN25	DN40	DN50	DN65	DN80	DN100	DN125	DN150	DN200
Power connections	24-240V DC/AC (50/60 Hz)								
Power consumption	0,20 A - 1,67 A	0,21 A - 1,98 A		0,18 A - 1,50 A		0,44 A - 3,30 A	0,47 A - 3,30 A		
Duration/90°	09 s ± 10%	13 s ± 10%		29 s ± 10%		34 s ± 10%	58 s ± 10%		
Heating	3,5 W								
Duty cycle (ED)	75%								
Protection class	IP67								
Ambient temperature range	-20°C - +70°C								
Connection plug*	EN175301-803 form A Industrial connectors, form C (9,4mm)								
Body material	Polyamide (PA6), green								
Limit switch	SPST NO 5A 125V AC / 3A 250V AC								

* Included in delivery

Schubert & Salzer Control Systems GmbH, Bunsenstr. 38, 85053 Ingolstadt, Tel: +49 (0)841-9654 0, Fax: +49 (0)841 9654 590
info.cs@schubert-salzer.com, www.schubert-salzer.com

Actuator Options

Fale safe position	In the event of a power failure, the actuator moves to a specified safety position (open or closed). Variants: NC, NO
Control signal	0-10V, 1-10V, 0-20mA, 4-20mA or 3-point
Potentiometer	Variants: 1kΩ, 5kΩ, 10kΩ
Bluetooth	A bluetooth module enables control and readout via Bluetooth.
Modbus	Connection to bus system for control and information about operating status.

Working pressure max.

DN	maximum differential pressure (delta p)						
	seat ring PTFE			seat ring PEEK			
	up to 80°C	120°C	170°C	up to 80°C	120°C	170°C	220°C
	bar	bar	bar	bar	bar	bar	bar
50	25	16	6	40	38,5	25	16
65-150	16	12	5	25	24	16	10

Temperature limits

	O-ring behind seat ring							
	Viton		NBR		EPDM		FFKM	
Seatring	Tmin [°C]	Tmax [°C]	Tmin [°C]	Tmax [°C]	Tmin [°C]	Tmax [°C]	Tmin [°C]	Tmax [°C]
PTFE	-15	170	-30	100	-40	140	-15	170
PEEK	-15	200	-30	100	-40	140	-15	220

Torques and mounting kits

for retrofitting actuators

DN	rotation angle nominal	max. nominal pressure PN	req. torque [Nm]		mounting kit ISO 5211 diagonal square shaft	
			on/off-operation	control operation	series 1	series 2
50	90°	PN40	30	50	F05/SW14	F07/SW17
65	90°	PN25	60	100	F07/SW17	F10/SW22
80	90°	PN25	60	100	F07/SW17	F10/SW22
100	90°	PN25	90	150	F07/SW17	F10/SW22
125	90°	PN25	150	250	F10/SW22	F12/SW27
150	90°	PN25	150	250	F10/SW22	F12/SW27

Functions

	Safety position	
	A-open	B-open
Distribution function	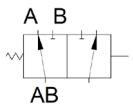	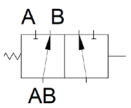
Mixing function	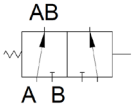	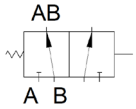

Kvs-Values

DN	Kvs-Values
50	61
65	106
80	139
100	202
125	296
150	382

Installation position of the actuator

Actuator installation on the body cover

Standard installation position	Installation position code "1"	Installation position code "2"	Installation position code "3"
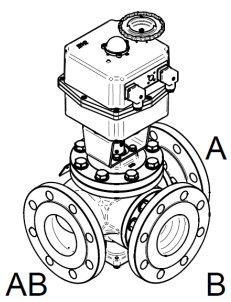	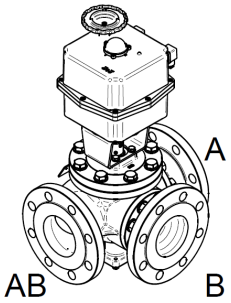	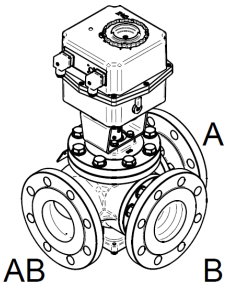	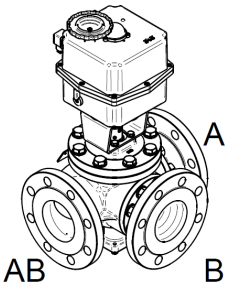

Actuator installation on the body flange

Installation position code "4"	Installation position code "5"	Installation position code "6"	Installation position code "7"
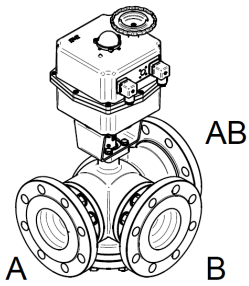	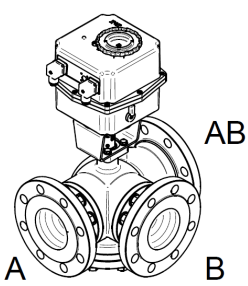	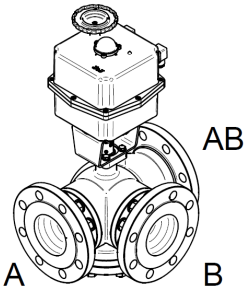	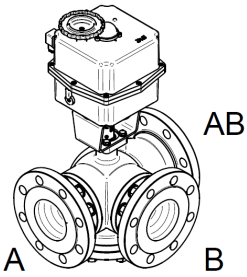

Operation time / 90° with standard actuator

DN	operation time / 90° [s]
50	13
65	29
80	29
100	34
125	58
150	58

Dimensions with standard actuator

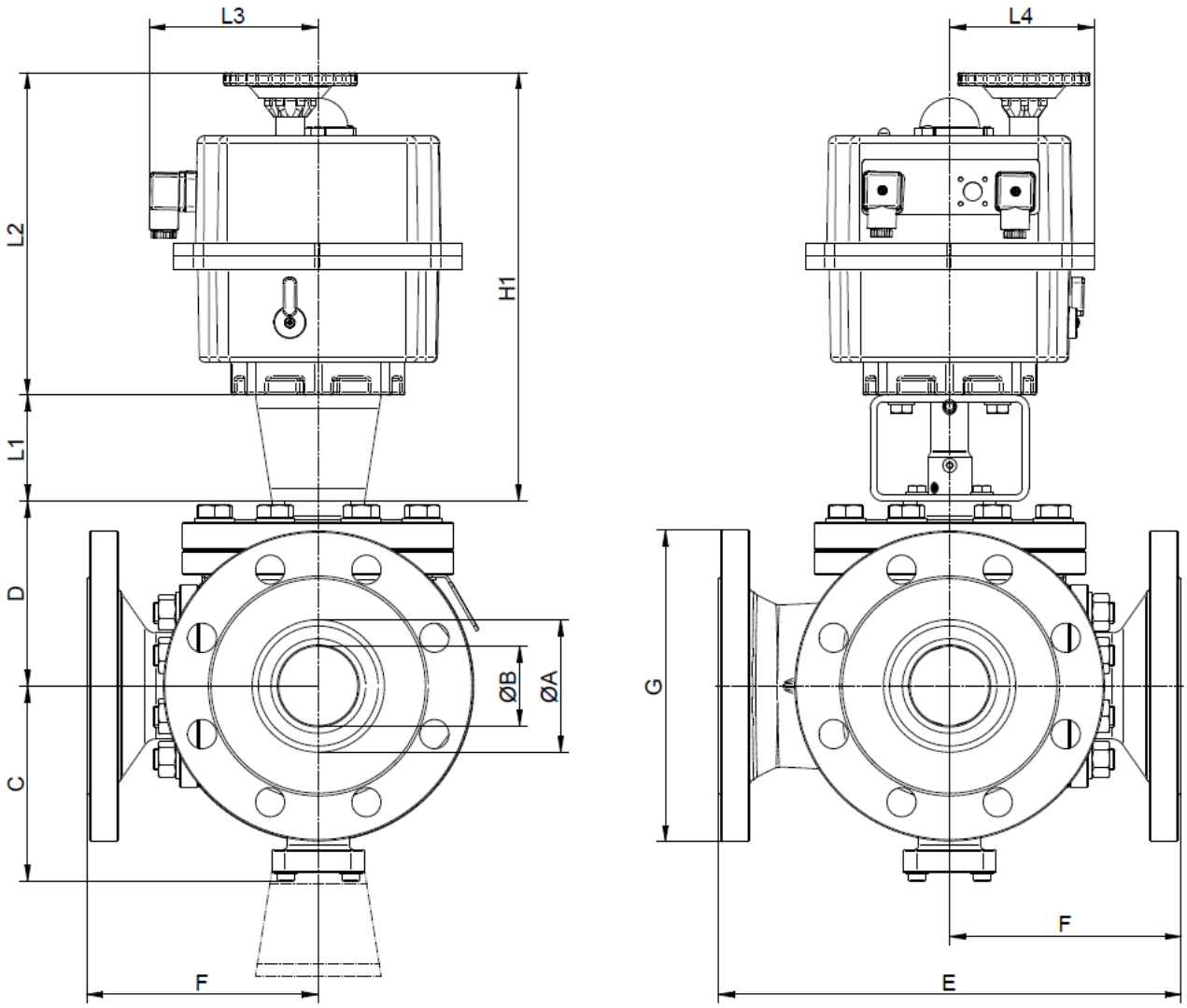

DN	L1	L2	L3	L4	H1	A	B	C	D	E	F	G	weight (kg)
50	60	196	130	55	256	50	35	105	96	230	115	165	26,4
65	60	196	130	73	256	65	45	125	116,5	290	145	185	36,8
80	60	196	130	73	256	80	50	133	125	310	155	200	45,6
100	80	254	128	110	334	100	60	148	139,5	350	175	235	60,9
125	80	254	128	110	334	100	75	182	168,5	400	200	270	111,7
150	80	254	128	110	334	150	85	196,5	183	480	245	300	149,4

dimensions in mm

Dimensions without actuator (with mounting kit ISO 5211)

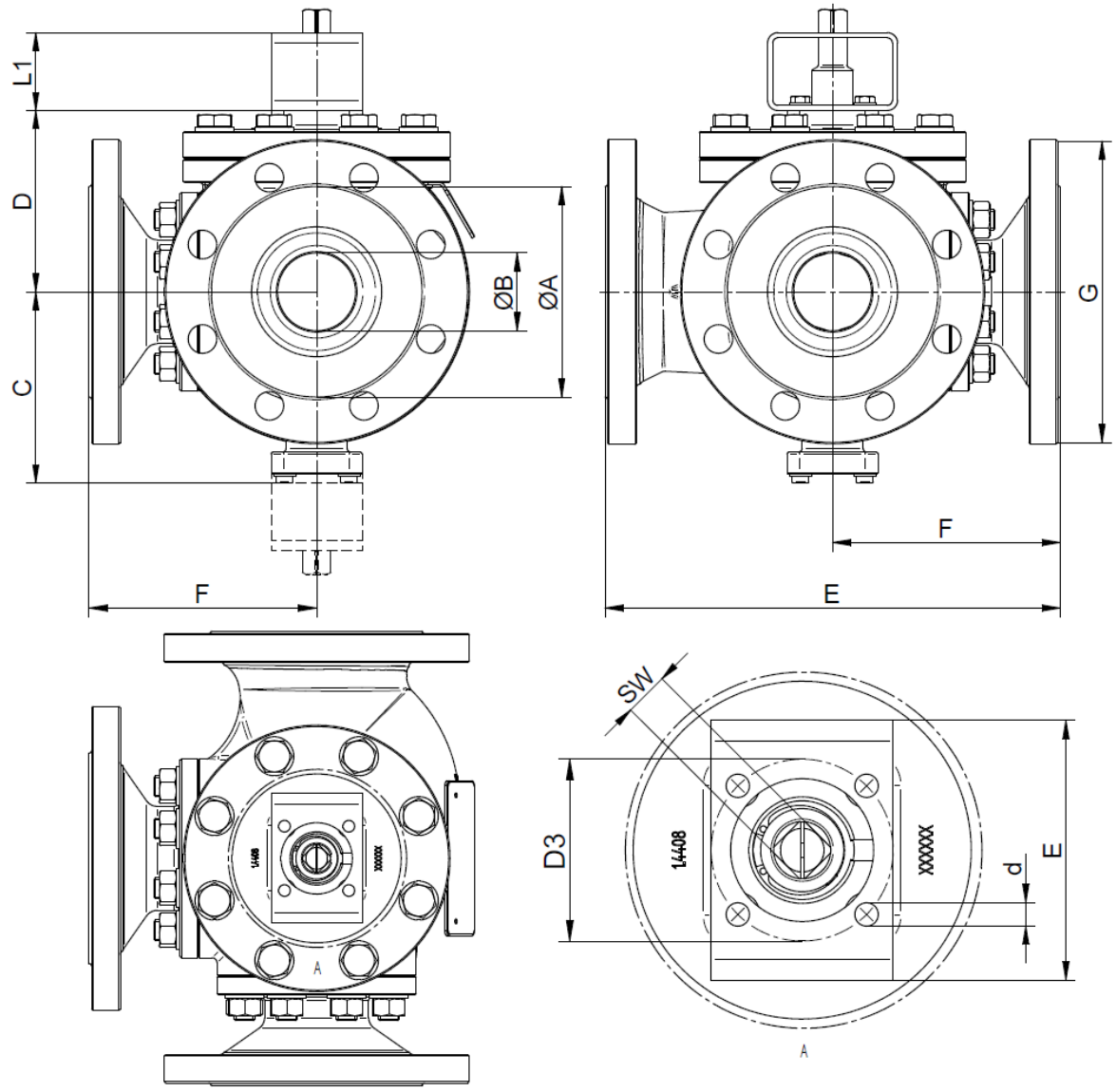

DN	A	B	C	D	E	F	G	series 1						series 2					
								L1	SW	d	D3	DIN ISO 5211	weight [kg]	L1	SW	d	D3	DIN ISO 5211	weight [kg]
50	50	35	105	96	230	115	165	60	14	6,6	50	F 05	22,6	60	17	9	70	F 07	24,0
65	65	45	125	116,5	290	145	185	60	17	9	70	F 07	33,8	80	22	11	102	F 10	35,4
80	80	50	133	125	310	155	200	60	17	9	70	F 07	42,6	80	22	11	102	F 10	44,2
100	100	60	148	139,5	350	175	235	60	17	9	70	F 07	54,2	80	22	11	102	F 10	55,7
125	125	75	182	168,5	400	200	270	80	22	11	102	F 10	106,5	80	27	13,5	125	F 12	107,4
150	150	85	196,5	183	480	240	300	80	22	11	102	F 10	144,2	80	27	13,5	125	F 12	145,1

dimensions in mm

Dimensions without actuator version with square

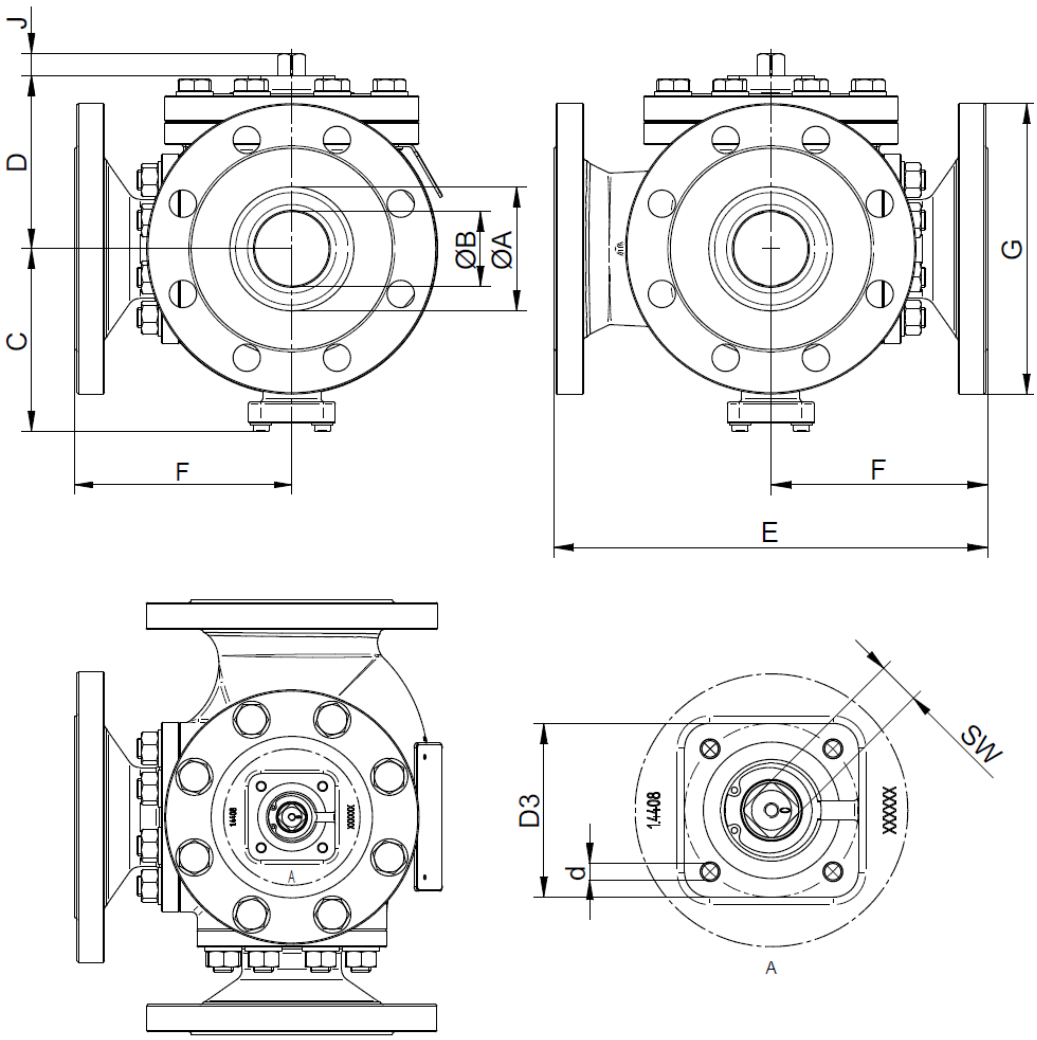

DN	A	B	C	D	E	F	J	SW	d	D3	DIN ISO 5211	weight [kg]
50	50	35	105	96	230	115	15	14	M6	50	F 05	21,9
65	65	45	125	116,5	290	145	18	17	M8	70	F 07	33,1
80	80	50	133	125	310	155	18	17	M8	70	F 07	41,9
100	100	60	148	139,5	350	175	18	17	M8	70	F 07	53,4
125	125	75	182	168,5	400	200	22,5	22	M10	102	F 10	105,1
150	150	85	196,5	183	480	240	22,5	22	M10	102	F 10	142,8

dimensions in mm