Sliding Gate Valve 8028

GS1 Series - DN15 up to DN150

Compact pneumatic sliding gate valve optionally with integrated positioner for regulating or shutting off liquid and gaseous media for industrial applications



- Excellent control precision due to less friction at the actuator
- High rangeability of 40:1 linear / 80:1 equal percentage
- Control of high differential pressures with small actuators
- Without positioner also suitable as shut-off valve
- Space saving wafer type construction
- Integrated positioner
- Lowest possible weight
- Quiet operation
- Fast response time
- Greatly reduced energy consumption rates due to short strokes and low actuating forces on the throttle elements
- Meets the requirements of TA-Luft 2021

short version

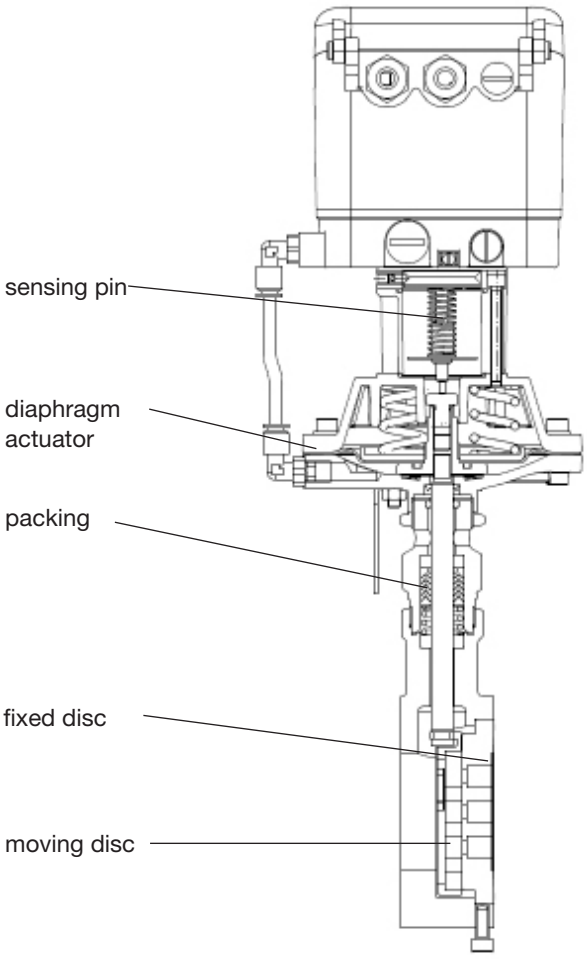

long version

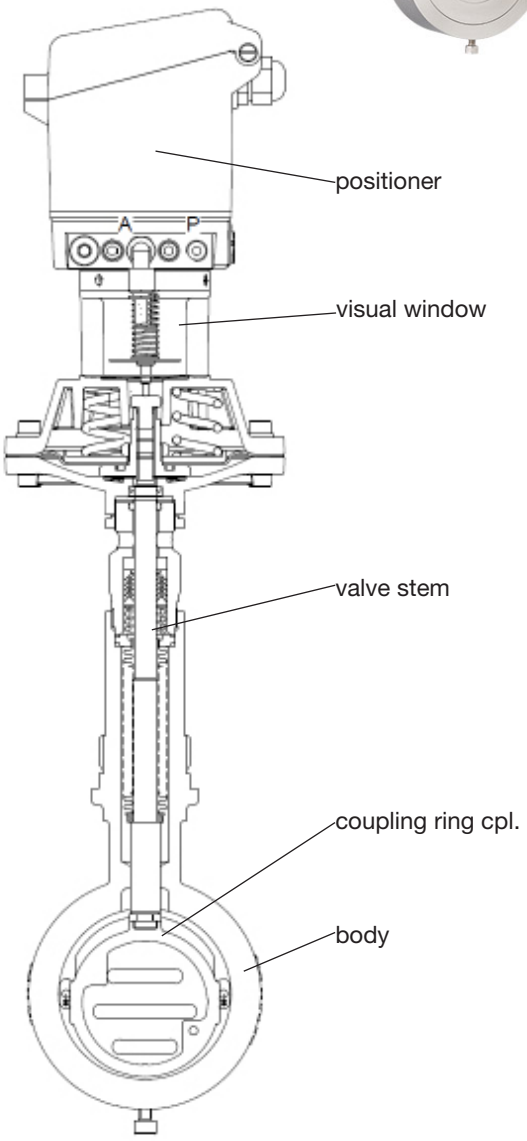

Schubert & Salzer Control Systems GmbH, Bunsenstr. 38, 85053 Ingolstadt, Tel: +49 (0)841-9654 0, Fax: +49 (0)841 9654 590
info.cs@schubert-salzer.com, www.schubert-salzer.com

Sliding gate valve 8028 - GS1

Technical information

Body design	flangeless, wafer-type construction dimensions acc. DIN EN 558-1 series 20 for flanges acc. DIN EN 1092-1, form B more versions see data-sheet 8028-GS3		
Nominal size	DN 15 to DN 150		
Nominal pressure	PN 40 acc. DIN 2401 (also for flanges PN 10 to PN 25)		
Fluid temperature	carbon steel body long stainless steel body long carbon steel body short stainless steel body short	-10°C to +350°C -60°C to +350°C -10°C to +230°C -20°C to +230°C, optional -60°C to +230°C	
Flange gaskets (customer side)	DIN EN 1514-1 or ANSI B16.21 in the respective nominal pressure rating		
Ambient temperature*	digital positioner -10°C up to +75°C		
Rangeability / Characteristic digital positioner	40:1 linear / 80:1 equal percentage		
Leakage % of Kvs IEC 60534-4 EN 12266-1	Disc Pair Carbon-stainless steel <0,0001 IV-S1 E	Disc Pair SFC <0,0005 IV-S1 F	Disc Pair STN2 <0,001 IV F
Marking ATEX non electric	II 2G Ex h IIC T6…T1 X Gb II 2D Ex h IIIC 85°C…530°C X Db		
Specific leakage rate shaft and body sealing	ISO FE - BH - CC3 - SSA0 - t (-40°C / +350 °C) - PN40 - ISO 15848-1		

* Please consider the limitation of use of the positioner!

Materials

	Version in stainless steel
Valve body	Stainless steel , 1.4408
Valve stem	Stainless steel, 1.4571
Coupling ring	Stainless steel, 1.4581
Tube for packing	Stainless steel 1.4408
Packing	PTFE filled with carbon (Spring 1.4310)
Body seal	Graphite with stainless steel inlay

	Version in C-steel
Valve body	C-steel, 1.0619
Valve stem	Stainless steel, 1.4571
Coupling ring	Stainless steel, 1.4581
Tube for packing	Stainless steel, 1.4408
Packing	PTFE filled with carbon (spring 1.4310)
Body seal	Graphite with stainless steel inlay

Sliding Gate Valve 8028 - GS1

Admissible Differential Pressure

DN	Sliding unit: carbon/SFC-stainless steel coatet diaphragm actuator 60 cm²		diaphragm actuator 125 cm²	
	max. working pressure	required pilot pressure	max. working pressure	required pilot pressure
	(bar)	(bar)	(bar)	(bar)
15	40	3,3	40	2,7
20	40	3,3	40	2,7
25	40	3,3	40	2,7
32	40	3,4	40	2,8
40	40	3,8	40	3
50	31	4,6	40	3,7
65	26	4,7	37	3,9
80	16,5	5	23	4
100	10,5	5,2	15	4,2
125	7,2	5,3	10	4,3
150	5,3	5,4	7,6	4,3

DN	Sliding unit: STN2 diaphragm actuator 60 cm²		diaphragm actuator 125 cm²	
	max. working pressure	required pilot pressure	max. working pressure	required pilot pressure
	(bar)	(bar)	(bar)	(bar)
15	40	3,3	40	2,7
20	40	3,5	40	2,8
25	40	4	40	3
32	31	4,3	40	3,3
40	21	4,6	26	3,4
50	13	5,1	18,5	4,1
65	10,5	5,2	15	4,1
80	6,4	5,3	9,2	4,2
100	4	5,4	5,7	4,3
125	2,6	5,4	3,8	4,4
150	1,9	5,5	2,8	4,4

Applications limits for GS1-Valves

PN40	Sliding unit: carbon/SFC - stainless steel, coated max. admissible pressures for GS1-valves					
DN	100°C	150°C	200°C	250°C	300°C	350°C
15 - 25	40	36	31	28	26	24
32	40	36	31	28	26	24
40	40	36	31	28	26	24
50	40	36	31	28	26	24
65	40	36	31	28	26	24
80	40	36	31	28	26	24
100	25	24	22	19	16	14,5
125	16,5	15,5	15	12,5	10,5	9,5
150	16	16	16	16	13	11,5

Sliding unit: STN2 max. admissible pressures for GS1-valves					
100°C	150°C	200°C	250°C	300°C	350°C
40	36	31	28	26	24
40	36	31	28	25	22
27	26	24	19,5	16	14
40	36	31	28	26	24
38	36	31	28	23	19,5
22	21	20	16	13	11,5
13,5	12,5	12,0	9,8	8,1	7,0
8,9	8,4	8,0	6,5	5,3	4,6
11	10,5	9,8	7,9	6,5	5,6

Limitation for SFC-sliding discs: 300°C

Kvs values

Ordering code		-	A	1	B	6	2	7	C	3	4	8	5	9
DN	Charact.	100 %	63 %	40 %	25 %	20%	16 %	12 %	10 %	6,3 %	2,5 %	2 %	1%	0,4%
15	(mod.) linear	4	2,6	1,7	1,4	-	0,71	0,49	0,44	0,26	0,14	0,08	0,04	0,018
	eq. perc.	1,7	-	1,1	-	0,35	-	-	-	0,1	-	-	-	-
20	(mod.) linear	6,4	-	-	-	-	1	-	-	-	-	0,13	-	-
	eq. perc.	3	-	1,5	-	-	-	-	-	-	-	-	-	-
25	(mod.) linear	11	6,4	4	-	-	1,6	-	0,93	0,62	0,26	-	0,14	0,04
	eq. perc.	5	-	2,4	-	1,1	-	-	-	0,35	-	-	-	-
32	(mod.) linear	16	10	-	-	-	-							
	eq. perc.	8	4,7	-	-	-	-							
40	(mod.) linear	26	16	11	7	-	-							
	eq. perc.	11	8,5	-	2,75	-	-							
50	(mod.) linear	45	28	20	12	10	-							
	eq. perc.	19	12	-	-	-	3							
65	(mod.) linear	52	35	-	15									
	eq. perc.	30	19	-	8									
80	(mod.) linear	92	58	40										
	eq.perc.	48	35	-										
100	(mod.) linear	154	95	62										
	eq.perc.	77	48	-										
125	(mod.) linear	237	-	95										
	eq.perc.	116	-	-										
150	(mod.) linear	338	212	-										
	eq.perc.	147	90	-										

Definition of the Kvs-Value:

The Kvs-value corresponds to the volume flow of water (m^3/h), passing the valve if a pressure difference of 1 bar is applied. Kvs is the Kv-value for a fully opened valve from the series production (acc. DIN IEC 534).

Sliding Gate Valve 8028 - GS1

		Slide pairing overview				
Moving plate		Carbon	Carbon	Carbon	SFC	STN2
Fixed plate		STN2	STN1	Brass	STN2	STN2
Nominal Sizes		DN15 - DN150	DN15 - DN150	DN15 - DN100	DN15 - DN150	DN15 - DN150
Fluid temperature	stainless steel	-60°C up to +350°C (max. 300°C with oxidising gases)	-60°C up to +300°C	-60°C up to +230°C	-60°C up to +300°C	-60°C up to +350°C
	carbon steel	-10°C up to +350°C (max. 300°C with oxidising gases)	-10°C up to +300°C	-10°C up to +230°C	-10°C up to +300°C	-10°C up to +350°C
Leakage rate*		1E-6 from the Kvs value	1E-6 from the Kvs value	1E-6 from the Kvs value	5E-6 from the Kvs value	1E-5 from the Kvs value
Leakage IEC 60534-4		IV-S1	IV-S1	IV-S1	IV-S1	IV
Leakage EN 12266-1		E	E	E	F	F
Limitation			ΔP max. 16 bar for liquids, max. 25 bar for gases	ΔP max. 10 bar for liquids, max. 40 bar for gases	ΔP max. 25 bar	
Typical applications		Gases, liquids at low differential pressures without cavitation; no pressure surges	Pure gases and liquids, no cavitation; no pressure surges	Pure gases and liquids, no cavitation; no pressure surges	Vapour, pure liquids	Gases, vapour and liquids also with cavitation

* For DN15 with reduction less than 25 %, different leakage rates possible

Sliding Gate Valve 8028 - GS1

Dimensions and weight - short version with digital positioner 8049

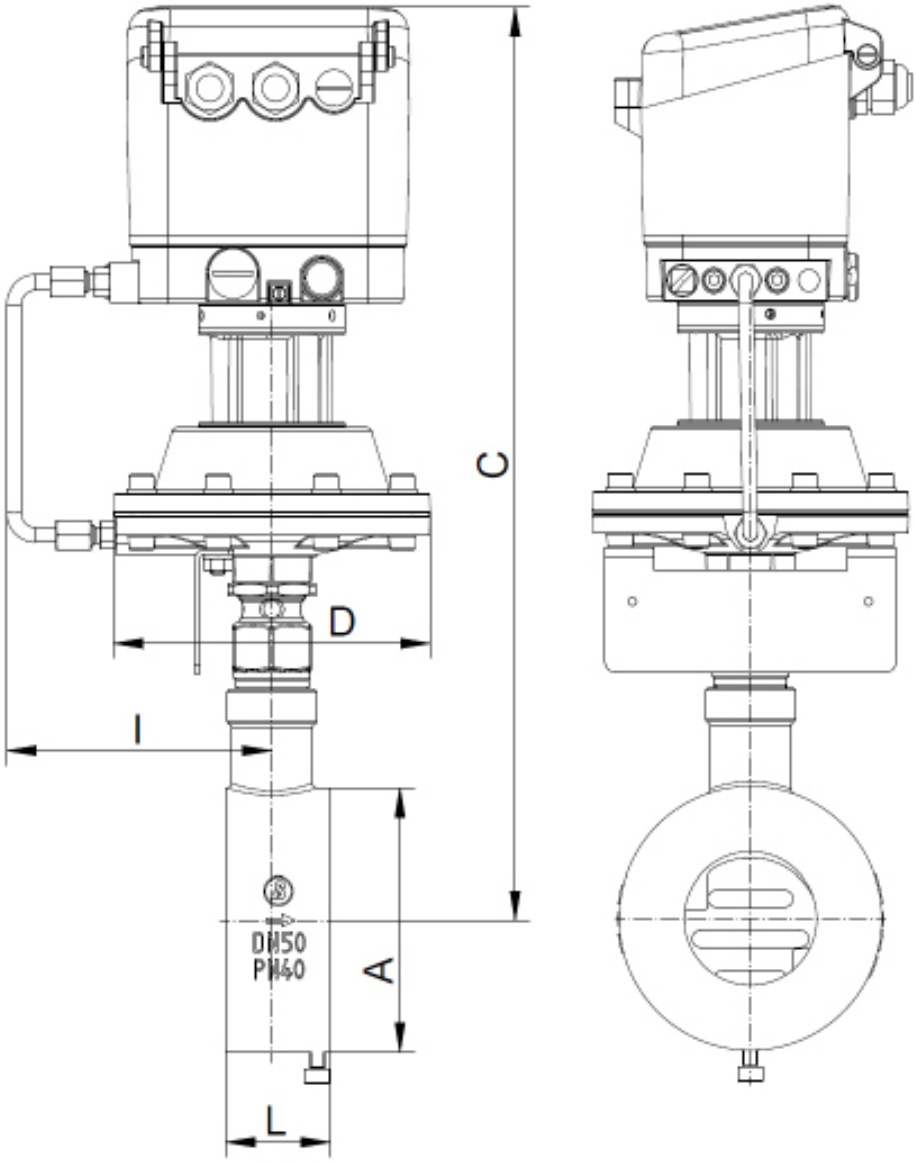

DN	A	C carbon steel body	C stainless steel body	60 cm²			125 cm²			L	Stroke H
				D	I	Weight (kg)	D	I	Weight (kg)		
15	53	356	335	130	114	3,0	165	127	3,9	33	6,25
20	62	361	340	130	114	3,1	165	127	4,0	33	6,25
25	72	366	345	130	114	3,2	165	127	4,1	33	6,25
32	82	369	349	130	114	3,2	165	127	4,1	33	6,25
40	92	374	354	130	114	3,4	165	127	4,3	33	6,25
50	108	375	377	130	114	4,5	165	127	5,4	43	8,25
65	126	384	386	130	114	5,0	165	127	5,9	46	8,25
80	142	392	394	130	114	5,7	165	127	6,6	46	8,25
100	164	405	407	130	114	6,9	165	127	7,8	52	8,75
125	194	426	428	130	114	8,7	165	127	9,6	56	8,75
150	219	472	474	130	114	10,6	165	127	11,5	56	8,75

dimensions in mm

Dimensions and weight - short version, Shut-Off-Valve

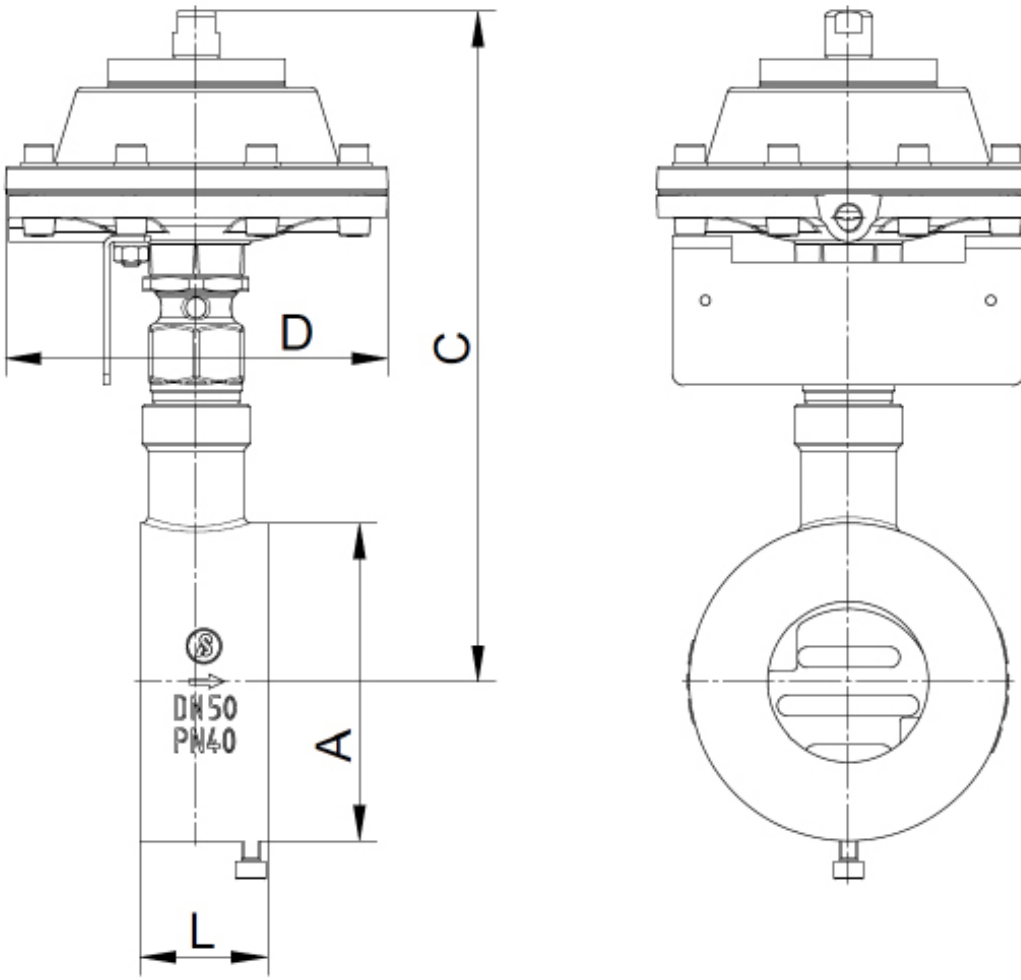

DN	A	C carbon steel body	C stainless steel body	60 cm²		125 cm²		L	Stroke H
				D	Weight (kg)	D	Weight (kg)		
15	53	209	188	130	2,0	165	2,9	33	6,25
20	62	214	193	130	2,1	165	3,0	33	6,25
25	72	219	198	130	2,2	165	3,1	33	6,25
32	82	222	202	130	2,2	165	3,1	33	6,25
40	92	227	207	130	2,4	165	3,3	33	6,25
50	108	228	230	130	3,5	165	4,4	43	8,25
65	126	237	239	130	4,0	165	4,9	46	8,25
80	142	245	247	130	4,7	165	5,6	46	8,25
100	164	258	260	130	5,9	165	6,8	52	8,75
125	194	278,85	281	130	7,7	165	8,6	56	8,75
150	219	324,85	327	130	9,6	165	10,5	56	8,75

dimensions in mm

Dimensions and weight - long version with digital positioner 8049

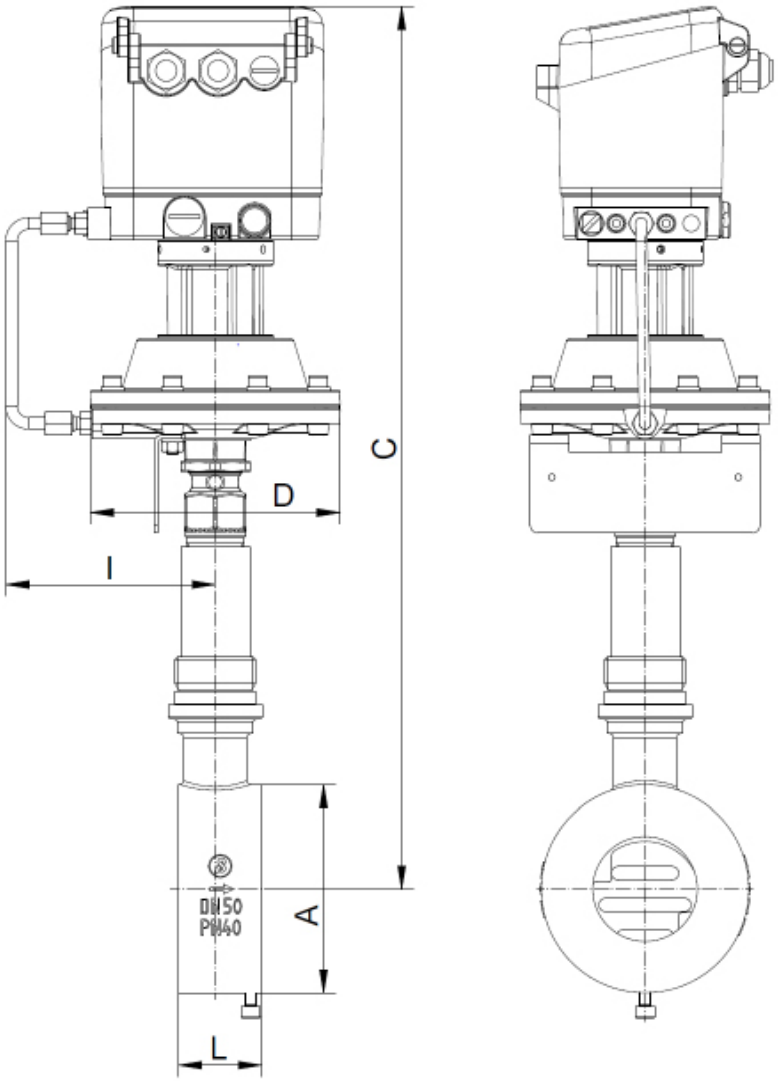

DN	A	C	60 cm²			125 cm²			L	Stroke H
			D	I	Weight (kg)	D	I	Weight (kg)		
15	53	430	130	114	3,0	165	127	3,9	33	6,25
20	62	437	130	114	3,1	165	127	4,0	33	6,25
25	72	440	130	114	3,2	165	127	4,1	33	6,25
32	82	445	130	114	3,2	165	127	4,1	33	6,25
40	92	450	130	114	3,4	165	127	4,3	33	6,25
50	108	459	130	114	4,5	165	127	5,4	43	8,25
65	126	468	130	114	5,0	165	127	5,9	46	8,25
80	142	477	130	114	5,7	165	127	6,6	46	8,25
100	164	490	130	114	6,9	165	127	7,8	52	8,75
125	194	502	130	114	8,7	165	127	9,6	56	8,75
150	219	520	130	114	10,6	165	127	11,5	56	8,75

dimensions in mm

Dimensions and weight - long version, Shut-Off-Valve

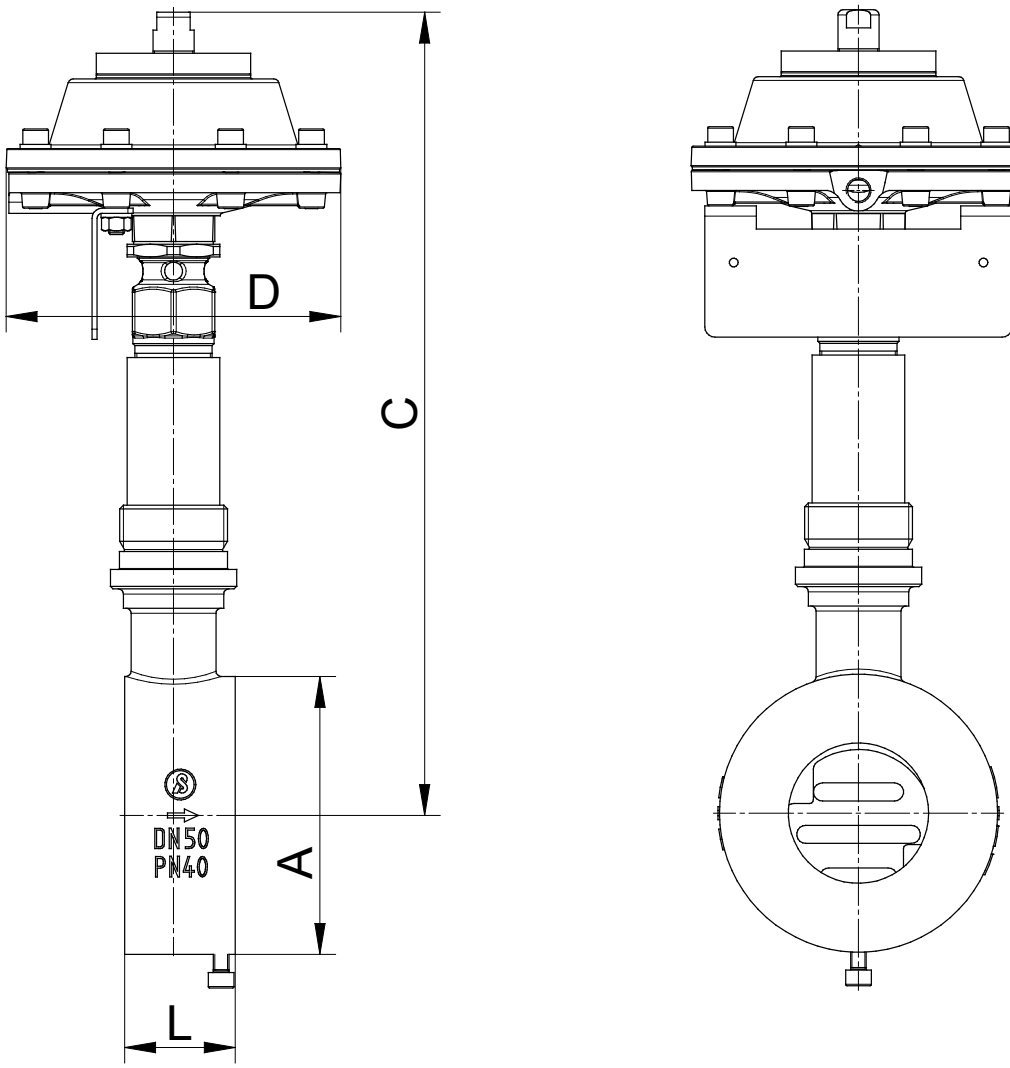

DN	A	C	60 cm²		125 cm²		L	Stroke
			D	Weight (kg)	D	Weight (kg)		H
15	53	283	130	2,7	165	3,6	33	6,25
20	62	290	130	2,8	165	3,7	33	6,25
25	72	293	130	2,9	165	3,8	33	6,25
32	82	298	130	2,9	165	3,8	33	6,25
40	92	303	130	3,1	165	4	33	6,25
50	108	312	130	4,2	165	5,1	43	8,25
65	126	321	130	4,7	165	5,6	46	8,25
80	142	330	130	5,4	165	6,3	46	8,25
100	164	343	130	6,6	165	7,5	52	8,75
125	194	355	130	10,3	165	11,2	56	8,75
150	219	373	130	12,2	165	13,1	56	8,75

dimensions in mm

Sliding Gate Valve 8028 - GS1

Enquiry sheet for sliding gate valves

Valve dimensioning

In order to be able to dimension a valve for a quotation, at least the following data must be known:

1. Medium

(Designation, composition and aggregate state)

2. Operating data

		minimal	normal	maximum	units
Input pressure	P1				
Output pressure	P2				
Temperature	T1				
Flow rate	Q				

3. Valve function

☐ Control valve ☐ Stop valve

4. Type of actuator

☐ Hand operated ☐ Pneumatically operated ☐ Electrically operated

Control pressure ..... bar Voltage V

☐ Spring opens (NO) ☐ Spring closes (NC)

5. Accessory

☐ Limit switch ..... Piece ☐ Pilot valve V

6. Other requests

Text and pictures are not binding. We reserve the right, to alter the equipment.