Hygienic Right Angle Valve 6053

DN65 up to DN150

Pneumatic control valve in angle valve design with integrated positioner Type 8049 or as a shut-off valve for applications in the food and beverage industry

- Body made from solid material
- Customer-friendly maintenance
- Components used conform to FDA and EC 1935/2004 regulations
- Optionally with 3A-conforming lower part of the valve
- Stainless steel diaphragm actuator
- Low dead space
- All wetted parts made out of stainless steel with Ra < 0.8 µm
- Temperature versions from -25°C to +170°C
- Operating pressures up to 25 bar
- Easy to clean
- Wetted stainless steel components made of solid material

FDA Konform



Control valve with positioner Type 8049

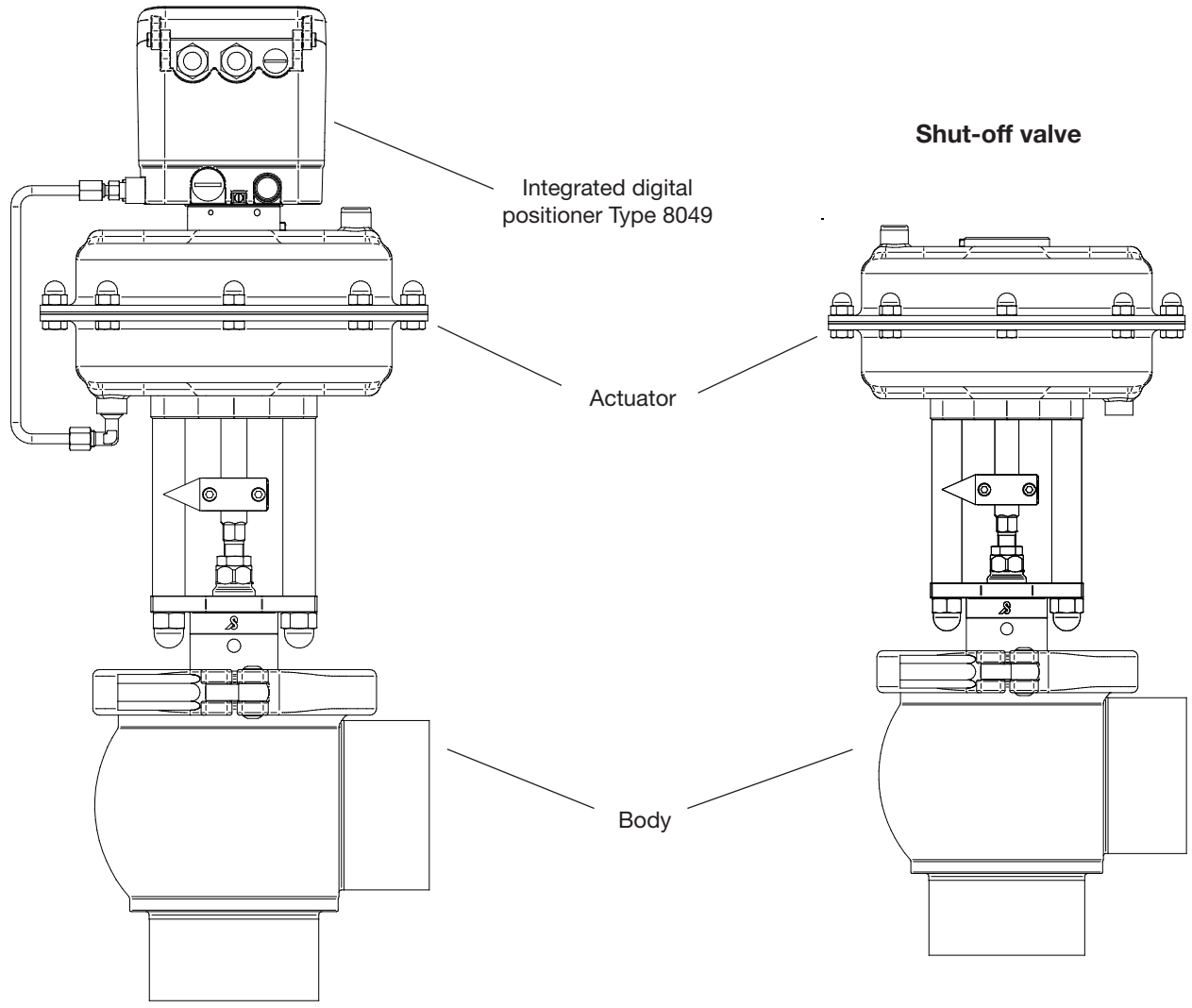

Schubert & Salzer Control Systems GmbH, Bunsenstr. 38, 85053 Ingolstadt, Tel: +49 (0)841-9654 0, Fax: +49 (0)841 9654 590
info.cs@schubert-salzer.com, www.schubert-salzer.com

Hygienic Right Angle Valve 6053

SCHUBERT SALZER

Technical information valve

Nominal sizes	DN65-DN150	
Connections	Weld ends according to DIN 11850 series 2 Clamp connection according to ASME BPE (DIN 32676-C)	
Nominal pressure	PN 25 PN 16	DN65-DN100 DN125-DN150
Operating pressures	Limitation for dangerous gases in according to Pressure Equipment Directive 2014/68/EU (Category I): PS x DN < 1000	
Medium temperature*	EPDM FKM HNBR	-20°C up to +130°C -15°C up to +170°C -25°C up to +130°C
Ambient temperature	Digital positioner type 8049: -10°C up to +75°C Analogue positioner type 8047: -15°C up to +60°C	
Rangeability	Digital positioner type 8049: 40 : 1 Analogue positioner type 8047: 25 : 1	
Surface finish inside	Ra ≤ 0,8 µm	
Surface finish outside (valve bottom)	Ra ≤ 1,6 µm	
Characteristic	Equal percentage	

* Depending on the seal material

Materials

Valve body	Stainless steel 1.4404 (316L)
Diaphragm actuator	Stainless steel 1.4301
Actuator springs	Stainless steel 1.4310
Valve stem	Stainless steel 1.4404 (316L)
Control cone	Stainless steel 1.4404 (316L)
Seat seal	EPDM, optional: FKM, HNBR
Body positioner type 8049	Coated aluminium and plastic Coated stainless steel and plastic Stainless steel complete

Positioner

For technical information of our positioners, type 8049 or 8047, refer to the corresponding data sheets.

KVS-Values

	DN				
	65	80	100	125	150
100%	63	100	160	250	400
63%	40	63	100	160	-

Seat diameter

DN	Kvs-Values 100%	Seat diameter in mm	Kvs-Values 63%	Seat diameter in mm
65	63	66	40	50
80	100	81	63	66
100	160	100	100	81
125	250	125	160	100
150	400	150	-	-

Pressure values (spring closes)

DN	Diaphragm actuator mm	Spring assembly Quantity	Permissible differential pressure bar	Supply air pressure bar
65	250	6	10	3 - 6
		8	13	3 - 6
		10	16	4 - 6
		12	19	4 - 6
80	250	6	6	3 - 6
		8	7,8	3 - 6
		10	9,6	4 - 6
		12	11	4 - 6
	500	16	17	3 - 6
		20	20,5	4 - 6
100	250	6	4	3 - 6
		8	5,3	3 - 6
		10	6,5	4 - 6
		12	7,7	4 - 6
	500	16	11,5	3 - 6
		20	14	4 - 6
125	250	12	2,1	4 - 6
	500	16	3,2	3 - 6
		20	4,1	4 - 6
		24	4,9	4 - 6
150	500	16	1,4	3 - 6
		20	1,7	4 - 6
		24	2,1	4 - 6

Pressure values (spring opens)

Nominal size	Actuator	Spring assembly Quantity	Max. Differential pressure [bar] at required control pressure [bar] 2	2,5	3	3,5	4	4,5	5	5,5	6
DN65	D250	4 (Standard)	6,9	12	17,5	-	-	-	-	-	-
		6	0,2	5,5	10,5	16	19,5	-	-	-	-
DN80	D250	4 (Standard)	4,1	7,2	10	13,5	-	-	-	-	-
		6	0	3,2	6,4	9,6	12,5	15	-	-	-
DN100	D250	4 (Standard)	2,7	4,9	7	9,2	11	12,5	-	-	-
		6	0	2,1	4,3	6,5	8,6	10,5	12,5	-	-

Actuator D250: max. pilot pressure 0.5 bar above the required pilot pressure

Preferred flow direction

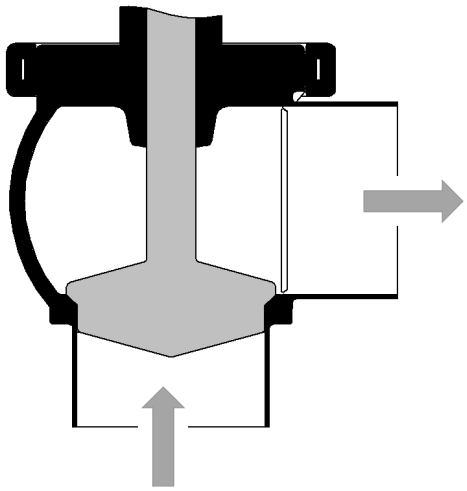

Hygienic Right Angle Valve 6053
with integrated positioner Type 8049

Dimensions and weights

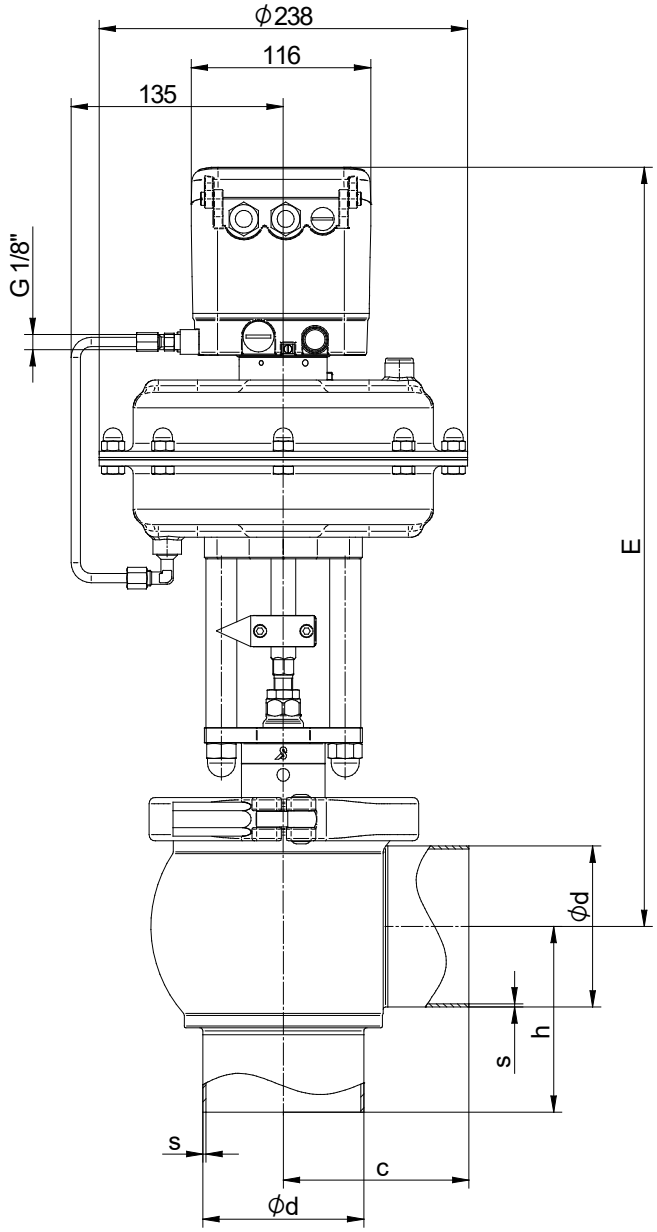

DN	Actuator ø	DIN s	d	c	h	E	Stroke	Weight [kg]
65	250	2	70	100	100	470	24	17,5
80	250	2	85	110	110	478	24	20
100	250	2	104	120	120	491	24	24,5
125	250	2	129	130	130	565	38	32

Dimensions in mm

For NO valves, dimension E is 31 mm higher.

Hygienic Right Angle Valve 6053
with integrated positioner Type 8049

Dimensions and weights

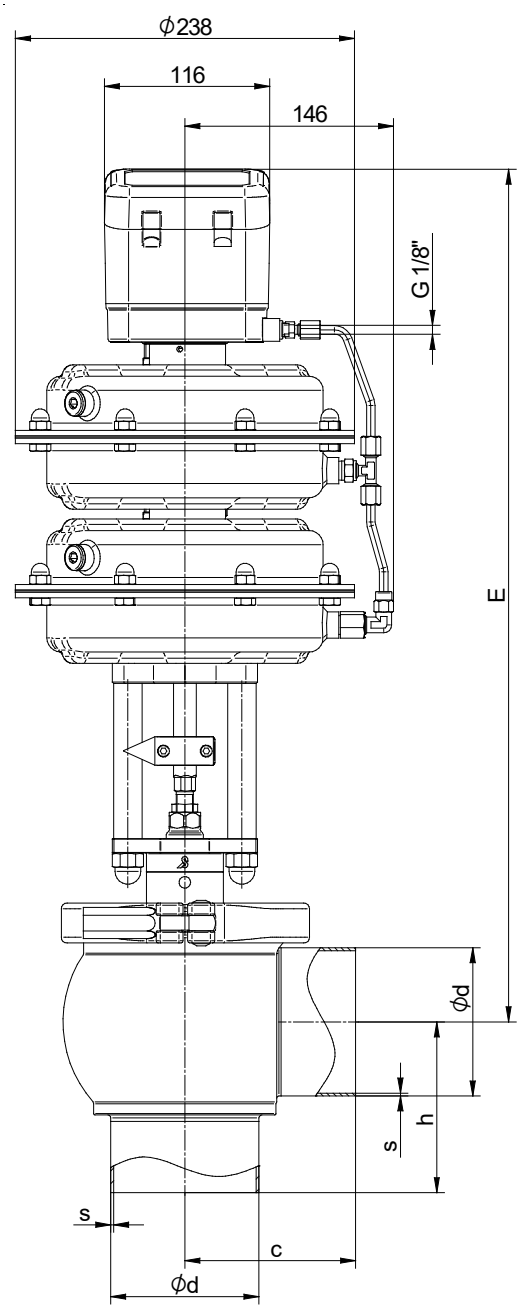

DN	Actuator ø	DIN s	d	c	h	E	Stroke	Weight [kg]
80	500	2	85	110	85	586	24	30,5
100	500	2	104	120	104	599	24	33
125	500	2	129	130	129	732	38	47
150	500	2	154	150	154	744	38	58

Dimensions in mm

NO valve version available on request

Hygienic Right Angle Valve 6053
Shut off valve

Dimensions and weights

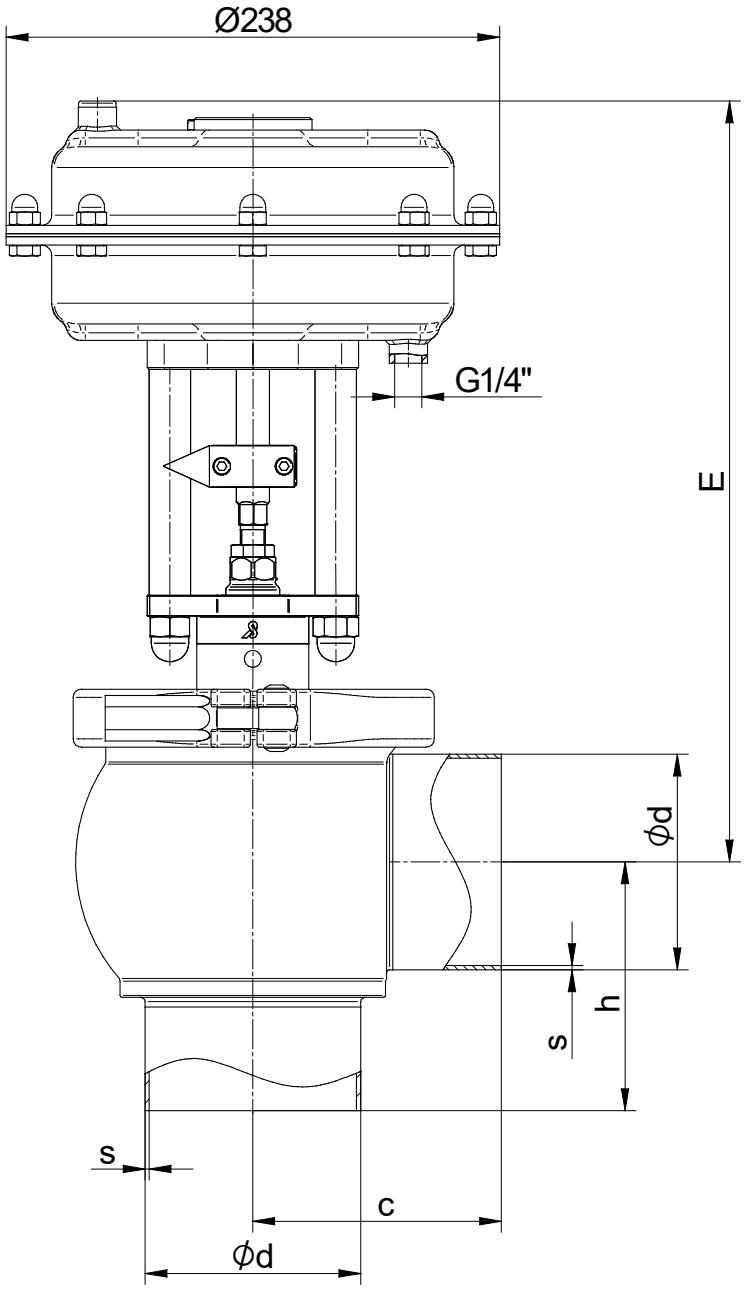

DN	Actuator ø	DIN s	d	c	h	E	Stroke	Weight [kg]
65	250	2	70	100	100	346	24	16,5
80	250	2	85	110	110	354	24	19
100	250	2	104	120	120	367	24	23,5
125	250	2	129	130	130	413	38	31

Dimensions in mm

For NO valves, dimension E is 32 mm higher

Hygienic Right Angle Valve 6053
Shut off valve

Dimensions and weights

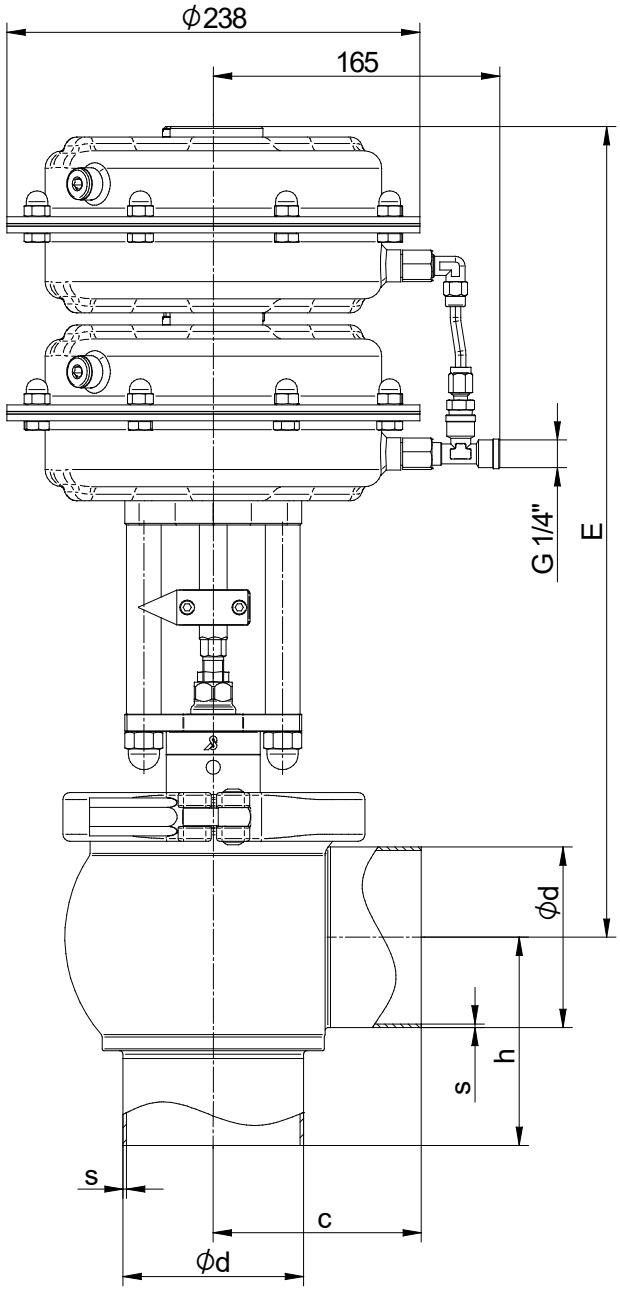

DN	Actuator ø	DIN s	d	c	h	E	Stroke	Weight [kg]
80	500	2	85	110	85	455	24	29
100	500	2	104	120	104	468	24	31,5
125	500	2	129	130	129	556	38	45,5
150	500	2	154	150	154	569	38	57

Dimensions in mm

Dimensions of clamp housing according to ASME BPE (DIN 32676-C)

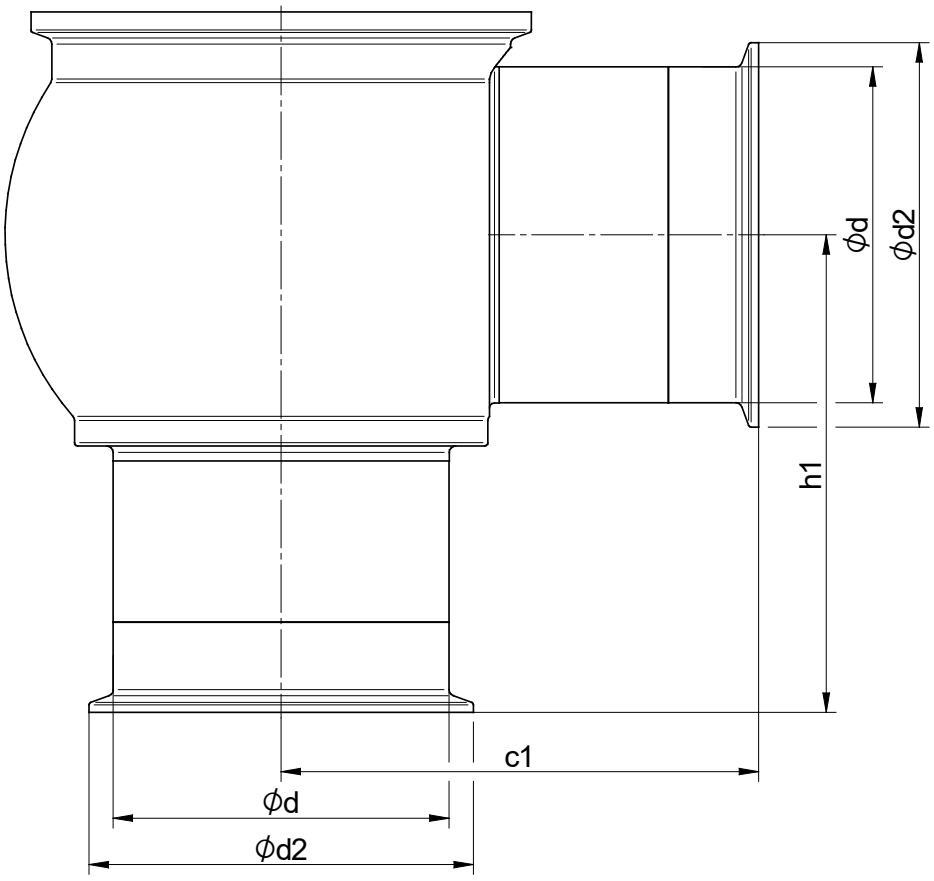

DN	Clamp connection acc. ASME-BPE (DIN 32676-C)				
	PN	Ø d	Ø d2	c1	h1
65	16	70	91	128	128
80	16	85	106	138	138
100	10	104	119	147,8	147,8
125	10	129	155	157,7	157,7
150	10	154	183	177,7	177,7

Dimensions in mm