# 700017




Full bore stainless steel AISI 316-CF8M,ball valve, F/F threading, ISO 5211.

NPT B.1.20.1 with butterfly.

**V-Ball option**

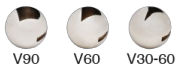




Low temperature design
-40°C ON DEMAND

## Technical specifications

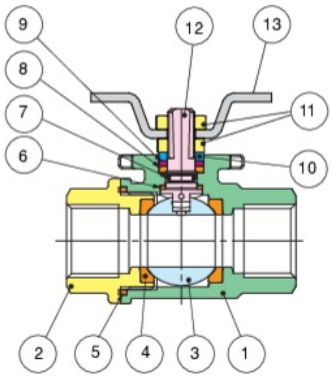


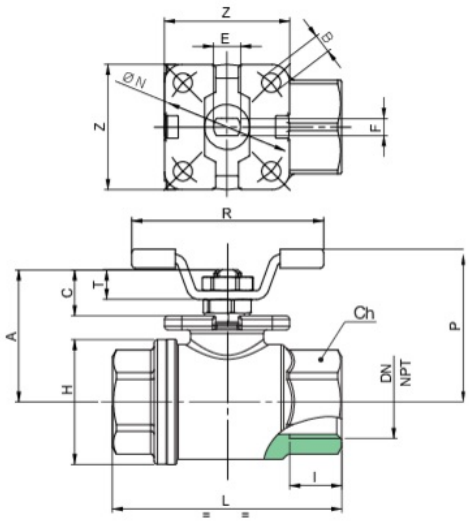


Temperature range: -20°C. +160°C.
Vacuum: $10^{-2}$ torr.

| POSITION | PART NAME | MATERIAL | N.° PIECES |
|---|---|---|---|
| 1 | BODY | A351-CF8M | 1 |
| 2 | END CONNECTION | A351-CF8M | 1 |
| 3 | BALL | A479-TP316/A351-CF8M | 1 |
| 4 | BALL SEAT | PTFE | 2 |
| 5 | BODY SEAT | PTFE | 1 |
| 6 | THRUST WASHER | TFM | 1 |
| 7 | O-RING | FKM (Viton) | 1 |
| 8 | STEM SEAT | PTFE | 1 |
| 9 | PACKING GLAND | AISI 303 | 1 |
| 10 | END STOP | AISI 430 | 1 |
| 11 | NUT | A2-70 | 2 |
| 12 | STEM | A479-TP316 | 1 |
| 13 | HANDLE | AISI 430 | 1 |

| SIZE | DN | CODE | BOX | I | L | H | CH | R | P | A | C | E | F | ØN ISO 5211 | B | Z | KV | PN | KG | T |
|---|---|---|---|---|---|---|---|---|---|---|---|---|---|---|---|---|---|---|---|---|
| 1/8" | 6 | 70001701 | 10 | 7,4 | 55 | 30 | ES.22 | 55 | 41 | 35 | 13,5 | 8 | 5 | 36 | 5,5 | 36 | 5 | 140 | 0,28 | 9 |
| 1/4" | 8 | 70001702 | 10 | 11 | 55 | 30 | ES.22 | 55 | 41 | 35 | 13,5 | 8 | 5 | 36 | 5,5 | 36 | 5,5 | 140 | 0,26 | 9 |
| 3/8" | 10 | 70001703 | 10 | 11,4 | 55 | 30 | ES.22 | 55 | 41 | 35 | 13,5 | 8 | 5 | 36 | 5,5 | 36 | 8,5 | 140 | 0,25 | 9 |
| 1/2" | 15 | 70001704 | 10 | 15 | 66 | 36 | ES.27 | 55 | 44 | 38 | 13,5 | 8 | 5 | 36 | 5,5 | 36 | 19,2 | 140 | 0,34 | 9 |

# Certifications

SIL 3

SIL 3

TUV

TUV

ATEX FIRE-SAFE (On request)