BONOMI GROUP

VALPRES

WAFER PN16



720565

Full bore flanged ball valve PN16, metric thread stainless steel A351-CF8 and A351-CF8M.

A182-F316/A351-CF8M PN6.

V-Ball option

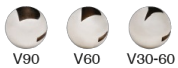

Technical specifications

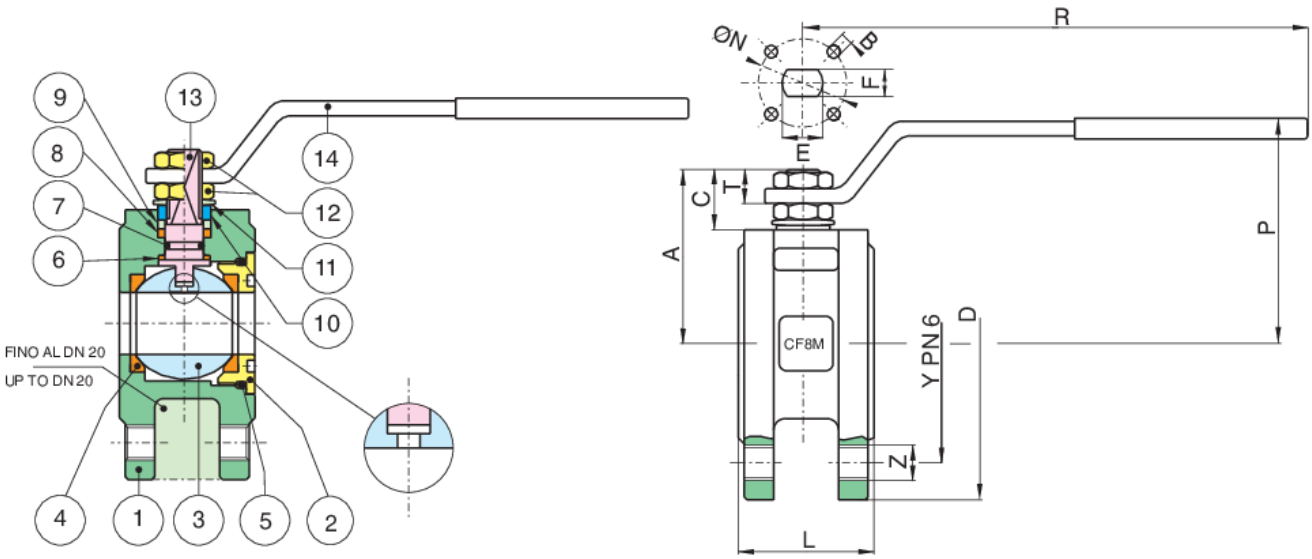

POSITION	PART NAME	MATERIAL	N.° PIECES
1	BODY	A351-CF8M/A479-TP316	1
2	END CONNECTION	A479-TP316	1
3	BALL	A351-CF8M/A479-TP316	1
4	BALL SEAT	PTFE	2
5	O-RING	FKM (Viton)	1
6	ANTIFRICTION RING	TFM	1
7	O-RING	FKM (Viton)	1
8	STEM SEAT	PTFE	1
9	PACKING GLAND	A479-TP316	1
10	90° STOP	AISI 316-AISI 304	1
11	SPRING WASHER	AISI 304	2
12	NUT	A2-70	2
13	STEM	A479-TP316	1
14	HANDLE	AISI 316	1

SIZE	DN	CODE	D	Y	Z	L	R	P	A	C	T	E	F	ØN	B	KV	PN	KG
1/2"	15	72056504	80	55	4xM10	35	131	65	47	15,5	9	10	7	32	4xM5	19,2	6	1,3
3/4"	20	72056505	90	65	4xM10	40	131	69	51,5	15,5	9	10	7	32	4xM5	35	6	1,7
1"	25	72056506	95	75	4xM10	46	174	80	61	19,5	11	12	8	42	4xM5	64,5	6	2,00
1"1/4	32	72056507	115	90	4xM12	54	174	84	65,5	19,5	11	12	8	42	4xM5	103,8	6	3,3
1"1/2	40	72056508	130	100	4xM12	63,5	250	102	78	24,5	13	16	10	50	4xM6	174	6	4,00
2"	50	72056510	140	110	4xM12	82	250	111	87	25	13	16	10	50	4xM6	301,3	6	6,00
2"1/2	65	72056512	185	130	4xM12	103	321	128	104,5	25	18	20	14	70	4xM8	545,7	6	10,00

Certifications

ADR BS 14432

F.E. TESTED ISO15848-1

TUV

SIL 3

ATEX FIRE-SAFE (On request)