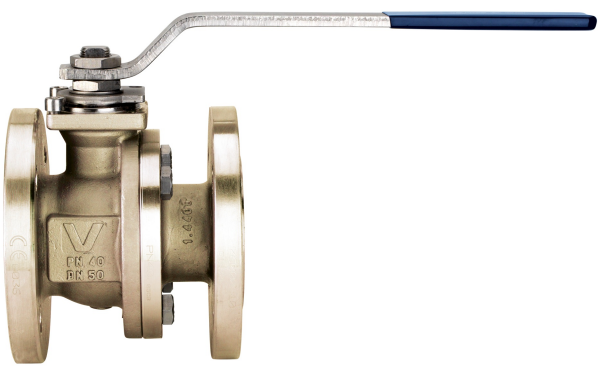

760V41

CARBON STEEL

Flanged PN 40 zinc-plated painted (DN>100) carbon steel A352-LCB ball valve, full bore, V-Pack stem seal, En 558 basic serie 27 face to face dimension, Fire Safe, Antistatic Device.

V-Ball option

V90 V60 V30-60

V-PACK

Low temperature design -40°C

Technical specifications

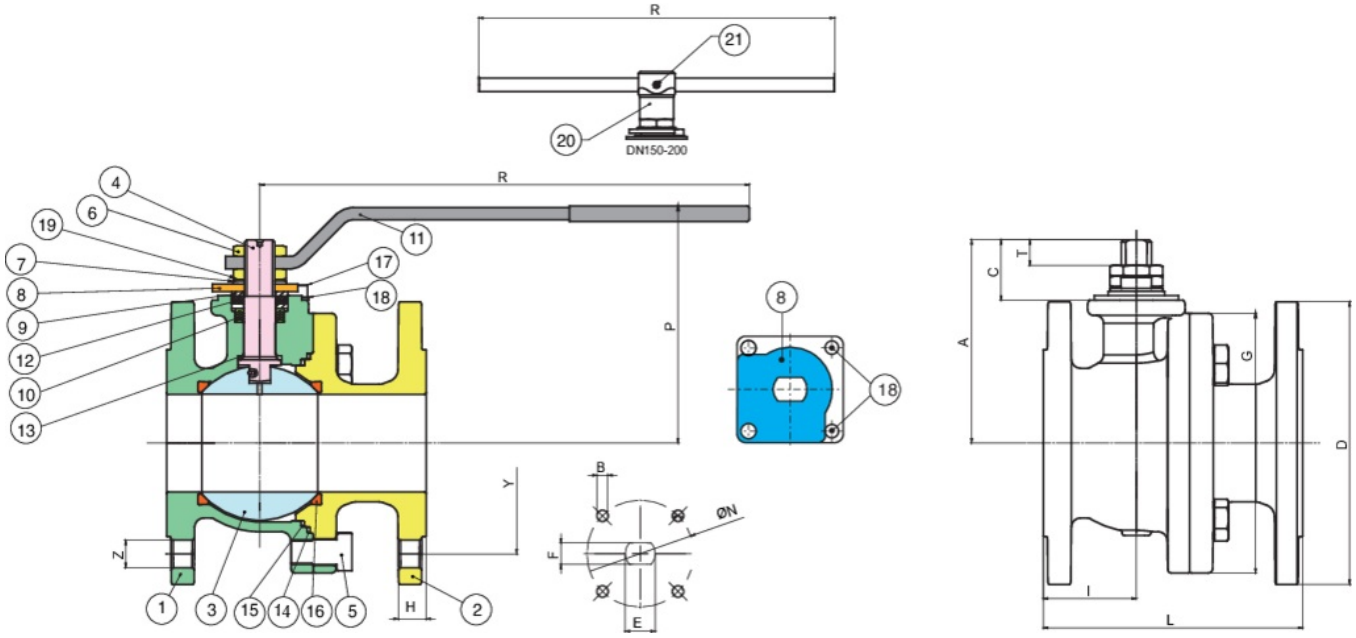

Temperature range: -40°C +180°C.

Vacuum: 10^{-2} torr.

POSITION	PART NAME	MATERIAL	N.° PIECES
1	BODY	A352-LCB	1
2	END CONNECTION	A352-LCB	1
3	BALL	A351-CF8/A479-TP304	1
4	STEM	A479-TP304/17-4-PH	1
5	SCREW	8.8 ENP CS	*4-8-12
6	NUT	6S ENP CS	**2-1
7	SPRING WASHER	50CRV4	4
8	90° STOP	A37 ENP CS	1
9	PACKING GLAND	A479-TP316	2
10	STEM SEAT	PTFE	1
11	HANDLE	A37 ENP CS	1
12	STEM SEAL	GRAPHOIL	1
13	THRUST WASHER	PTFE	1
14	BODY SEAT	GRAPHOIL	1
15	BODY SEAT	PTFE	1
16	BALL SEAT	TFM-MPTFE	2
17	SCREW	A2-70	2
18	WASHER	AISI 304	2
19	UNSCREWING GROWER	AISI 316	1
20	BODY HANDLE DN150-200	EN GJL 250	1
21	SCREW	8.8 CS	2

SIZE	DN	CODE	D	Y	Z	H	I	L	G	P	R	A	C	T	E	F	ØN	B	KV	PN	KG
1/2"	15	760V4104	95	65	4xØ14	16	49	115	71	88	131	52	19	8	M10	7	42-F04	M5	16,3	40	2,50
3/4"	20	760V4105	105	75	4xØ14	18	51	120	73,5	93	131	56	19	8	M10	7	42-F04	M5	29,5	40	3,20
1"	25	760V4106	115	85	4xØ14	18	54	125	90,5	89	174	72,5	27,5	13	M12	8	50-F05	M6	43	40	4,50
1"1/4	32	760V4107	140	100	4xØ18	18	55	130	97	93	174	76	27,5	13	M12	8	50-F05	M6	89	40	5,80
1"1/2	40	760V4108	150	110	4xØ18	18	51,5	140	114	133	250	107	30	10	M16	10	50-F05	M6	230	40	8,10
2"	50	760V4110	165	125	4xØ18	20	57,5	150	136,5	144	321	122	38,5	18	M20	14	70-F05	M8	265	40	11,40
2"1/2	65	760V4112	185	145	8xØ18	22	61	170	167,6	154	321	133	39,5	18	M20	14	70-F07	M8	540	40	15,40
3"	80	760V4114	200	160	8xØ18	24	75,5	180	178,6	173	381	151	43	18	M24	18	102-F10	M10	873	40	21,60
4"	100	760V4118	235	190	8xØ22	24	80	190	219	187	381	165	43	18	M24	18	102-F10	M10	1390	40	31,20
6"	150	760V4120	300	250	8xØ25	28	163	350	306	305	700	245	68	35	M42	30	125-F12	M12	3671	40	82,70
8"	200	760V4121	375	320	12xØ29	34	201	400	410	348	700	290	68	41	M42	30	125-F12	M12	6816	40	143,00

*TRUNNION Δp=25 bar

**Art. 760V00. - ***Art. 760V01.

Certifications

TUV SIL 3

FIRE-SAFE Acc. EN ISO 10497/API 607

F.E. TESTED ISO15848-1

Spare Parts

SEATS

Code	Material	Size
RI6612	TFM + V-PACK	15
RI6613	TFM + V-PACK	20
RI6436	TFM + V-PACK	25
RI6614	TFM + V-PACK	32
RI6615	TFM + V-PACK	40
RI6616	TFM + V-PACK	50
RI6617	TFM + V-PACK	65
RI6618	TFM + V-PACK	80
RI6463	TFM + V-PACK	100
RI6619	TFM + V-PACK	125
RI6620	TFM + V-PACK	150
RI6621	TFM + V-PACK	200