

776000(L) - 776001(T)

CARBON STEEL

Reduce bore three way flanged PN16 diverter ball valve, blued A105 carbon steel material, L and T multi port ball, with 2 seats.

Technical specifications

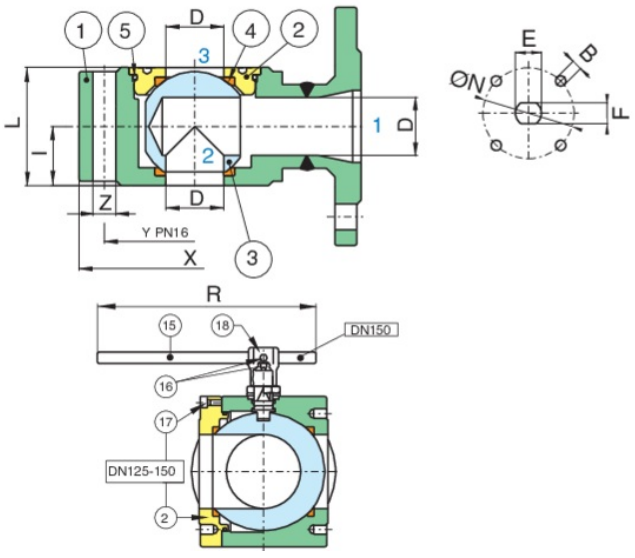

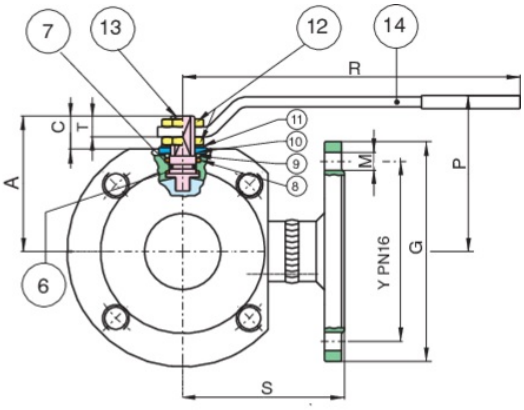

Carbon steel temperature range: -10°C +160°C.

Vacuum: 10^{-3} torr.

POSITION	PART NAME	MATERIAL	N.° PIECES
1	BODY	ASTM A105	1
2	END CONNECTION	ASTM A105	1
3	BALL	A351-CF8/A479-TP304	1
4	BALL SEAT	PTFE	2
5	O-RING	FKM	1
6	THRUST WASHER	PTFE	1
7	O-RING	FKM	1
8	STEM SEAT	PTFE	1
9	PACKING GLAND	CARBON STEEL	1
10*	END STOP	INOX AISI 430 (DN15-DN50) CARBON STEEL (DN65-DN150)	2-1
11	SPRING WASHER	CARBON STEEL	2
12	NUT	CARBON STEEL	2
13	STEM	A479-TP304	1
14	HANDLE	CARBON STEEL	1
15	HANDLE DN 150	CARBON STEEL	1
16	SCREW	CARBON STEEL	1
17	SCREW	CARBON STEEL	8
18	BODY HANDLE DN150	EN GJL 250	1

SIZE	DN	CODE	X	Y	Z	I	L	R	P	A	C	G	M	D	S	E	F	ØN	B	KV(L)	PN	KG
1/2"	15	77600004-77600104	89	65	4xM12	20	40	131,5	64,5	47	15,5	95	4xØ14	10	76	10	7	32	4xM5	2,8	16	2,23
3/4"	20	77600005-77600105	99	75	4xM12	20	40	131,5	67	49,5	13,5	105	4XØ14	15	82	10	7	32	4XM5	5,2	16	2,86
1"	25	77600006-77600106	109	85	4XM12	23	46	174,5	79	59	18	115	4xØ14	20	86	12	8	42	4xM5	9,2	16	3,89
1"1/4	32	77600007-77600107	130	100	4xM16	29	58	250,5	84	64	15,5	140	4xØ18	25	105	12	8	42	4xM5	14,4	16	6,21
1"1/2	40	77600008-77600108	140	110	4xM16	35,5	71	250,5	102,5	78	24,5	150	4xØ18	32	110	16	10	50	4xM6	25,9	16	8,50
2"	50	77600010-77600110	160	125	4xM16	41	82	321,5	109	85	25	165	4xØ18	40	120	16	10	50	4xM6	40,4	16	12,27
2"1/2	65	77600012-77600112	180	145	4xM16	53	106	321,5	128	104,5	28	185	4xØ18	50,2	125	20	14	70	4xM8	63,2	16	19,10
3"	80	77600014-77600114	200	160	8xM16	61	122	381,5	136,5	113	28	200	8xØ18	64	150	20	14	70	4xM8	115,8	16	24,34
4"	100	77600018-77600118	220	180	8xM16	76	152	381,5	155,5	136	34,5	220	8xØ18	76	159	24	18	102	4xM10	163,2	16	38,45
5"	125	77600019-77600119	250	210	8xM16	98	196	381,5	178,5	159	34,5	250	8xØ18	100	190	24	18	102	4xM10	282,6	16	63,00
6"	150	77600020-77600120	306	240	8xM20	116	242	700	252	201	49	285	8xØ22	125	210	42	30	125	4xM12	441,6	16	108,00

*For automation please consult factory.

Certifications

TUV

ATEX (On request)

Spare Parts

- HANDLES

Code	Material	Size
RI2018	A 37	15
RI2018	A 37	20
RI2019	A 37	25
RI2019	A 37	32
RI2020	A 37	40
RI2020	A 37	50
RI2016	A 37	65
RI2016	A 37	80
RI2017	A 37	100
RI2017	A 37	125
RI2021	A 37	150
RI2021	A 37	200

SEATS

Code	Material	Size
RI2211	PTFE	15
RI2212	PTFE	20
RI2213	PTFE	25
RI2214	PTFE	32
RI2215	PTFE	40
RI2216	PTFE	50
RI2217	PTFE	65
RI2218	PTFE	80
RI2219	PTFE	100
RI2211	PTFE	15
RI2212	PTFE	20
RI2213	PTFE	25
RI2214	PTFE	32
RI2215	PTFE	40
RI2216	PTFE	50
RI2217	PTFE	65
RI2218	PTFE	80
RI2219	PTFE	100

BALL

Code	Material	Size
00302000027	AISI 316	15
00304000082	AISI 316	20
00305000073	AISI 316	25
00306000086	AISI 316	32
00307000066	AISI 316	40
00308000063	AISI 316	50
00310000102	AISI 316	65
00312000029	AISI 316	80
00314000039	AISI 316	100
00318000008	AISI 316	125
00319000002	AISI 316	150
00302000017	AISI 316	15
00304000083	AISI 316	20
00305000078	AISI 316	25
00306000080	AISI 316	32
00307000058	AISI 316	40
00308000064	AISI 316	50
00310000023	AISI 316	65
00312000031	AISI 316	80
00314000010	AISI 316	100
00318000025	AISI 316	125
00319000004	AISI 316	150

STEMS

Code	Material	Size
00405000061	AISI 304	15
00405000061	AISI 304	20
00406000046	AISI 304	25
00406000046	AISI 304	32
00408000051	AISI 304	40
00408000051	AISI 304	50
00412000054	AISI 304	65
00412000054	AISI 304	80
00418000037	AISI 304	100
00418000037	AISI 304	125
00420000016	AISI 304	150

STEMS ANTISTATIC DEVICE

Code	Material	Size
00404000033	AISI 316	15
00406000020	AISI 316	20
00406000020	AISI 316	25
00408000023	AISI 316	32
00410000024	AISI 316	40
00410000024	AISI 316	50
00412000015	AISI 316	65
00414000003	AISI 316	80
00414000003	AISI 316	100