BONOMI GROUP

VALPRES

WAFER PN16



720012

Full bore flanged ball valve PN16, in blued carbon steel ASTM A105/A352-LCB.

ASTM-A105 Jackted end connection.

V-Ball option



Technical specifications

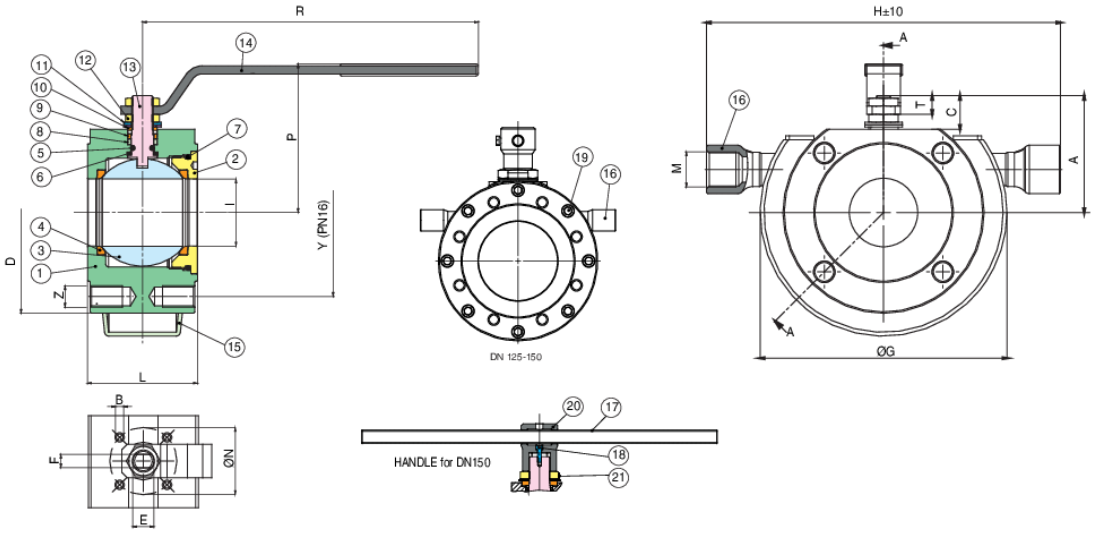

POSITION	PART NAME	MATERIAL	N.° PIECES
1	BODY	ASTM A105	1
2	END CONNECTION	ASTM A105	1
3	BALL	A351-CF8/A479-TP304	1
4	BALL SEAT	PTFE	2
5	O-RING	FKM (Viton)	1
6	ANTIFRICTION RING	TFM	1
7	O-RING	FKM (Viton)	1
8	STEM SEAT	PTFE	1
9	PACKING GLAND	A37+Z/P	1
10	90° STOP	AISI 430 (DN15-DN50) A37+Z-P (DN65-DN200)	2
11	SPRING WASHER	51CrV4+Z/P	2
12	NUT	6S+Z/P	2
13	STEM	S275J2H	1
14	HANDLE	A37+Z/P	1
15	HEATING JACKET	CARBON STEEL	1
16	END CONNECTION	A351-CF8/A479-TP316	2
17	HANDLE DN150	S275J2H	1
18	SCREW DN150	8.8+Z/P	2
19	SCREW	8.8+Z/P	8
20	BODY HANDLE DN150	EN GJL 250	1
21	UNSCREWING GROWER DN150	AISI 316	1

SIZE	DN	CODE	D	Y	Z	L	R	P	A	C	T	E	F	ØN	B	KV	PN	KG	H	M
1/2"	15	72001204	90	65	4xM12	35	131	65	47	15,5	9	10	7	32	4xM5	19,2	16	1,95	225	G3/4" ISO228
3/4"	20	72001205	100	75	4xM12	40	131	69	51,5	15,5	9	10	7	32	4xM5	35	16	1,90	235	G3/4" ISO228
1"	25	72001206	110	85	4xM12	46	174	80	61	19,5	11	12	8	42	4xM5	64,5	16	3,45	225	G3/4" ISO228
1"1/4	32	72001207	130	100	4xM16	54	174	84	65,5	16,5	11	12	8	42	4xM5	103,8	16	4,20	240	G3/4" ISO228
1"1/2	40	72001208	140	110	4xM16	63,5	250	102	78	24,5	13	16	10	50	4xM6	174	16	7,25	250	G3/4" ISO228
2"	50	72001210	150	125	4xM16	82	250	111	87	25	13	16	10	50	4xM6	301,3	16	10,2	260	G3/4" ISO228
2"1/2	65	72001212	185	145	4xM16	103	321	128	104,5	28	18	20	14	70	4xM8	545,7	16	16,7	270	G3/4" ISO228
3"	80	72001214	200	160	8xM16	122	321	138	115	28,5	18	20	14	70	4xM8	872,5	16	22,5	270	G3/4" ISO228
4"	100	72001218	220	180	8xM16	152	381	156	137	34,5	22	24	18	102	4xM10	1363,3	16	36,6	270	G3/4" ISO228
5"	125	72001219	250	210	8xM16	196	381	178	159	34	22	24	18	102	4xM10	2360,3	16	42,5	332	G1" ISO228
6"	150	72001220	285	240	8xM20	232	700	266	201,5	51,5	30	42	30	125	4xM12	3671,1	16	68,2	370	G1" ISO228

Certifications

F.E. TESTED ISO15848-1

TUV

SIL 3

ATEX FIRE-SAFE (On request)