INTER-GAS



707600

Fully welded painted ASTM A105/WCB reduced bore floating ball valve for natural gas, elongated stem for installation underground level, BW ends, in accordance to UNI 9734 and EN 13774.

Technical specifications

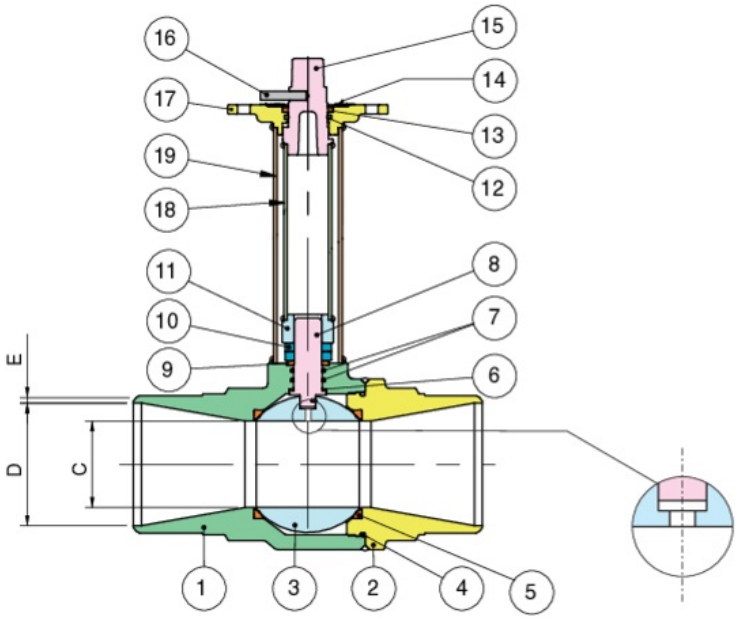

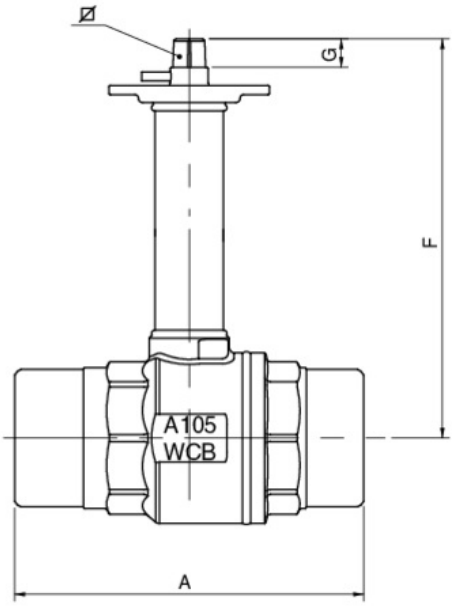

Temperature range: -10°C +60°C.

POSITION	PART NAME	MATERIAL	N.° PIECES
1	BODY	ASTM A105/WCB	1
2	END CONNECTION	ASTM A105/WCB	1
3	BALL	A479-TP304	1
4	O-RING	NBR	1
5	BALL SEAT	PTFE	2
6	SEAT	PTFE	1
7	O-RING	FKM	2
8	STEM	A479-TP304	1
9	PACKING GLAND	POM	1
10	NUT	CARBON STEEL	2
11	STEM TRASMISSION	ASTM A105	1
12	O-RING	FKM	1
13	SEAT	PTFE	1
14	LABEL	ALUMINIUM	1
15	OPERATION SQUARE	A216-WCB	1
16	OPEN/CLOSED INDICATION	CARBON STEEL	1
17	CAP	A216-WCB	1
18	EXTERNAL STEM EXTENSION	CARBON STEEL	1
19	INTERNAL STEM EXTENSION	CARBON STEEL	1

SIZE	DN	CODE	A	C	D	E	F 707400	F 707600	F 707800	G		KV	PN	KG
4"X3"	-	70760064	305	76	107,9	4,8	400	600	800	25	22 x 22	872,5	20	22,50
5"X4"	-	70760066	380	102	131,5	5,4	400	600	800	25	22 x 22	1363,3	20	36,00
6"X4"	-	70760074	457	102	159,3	5,1	400	600	800	25	22 x 22	1363,3	20	48,50
8"X6"*	-	70760081	521	150	209,1	7,5	400	600	800	30	36 x 27	3671,1	20	90,00

Connection for gear operator.

Epoxy painting 100 micron thick.