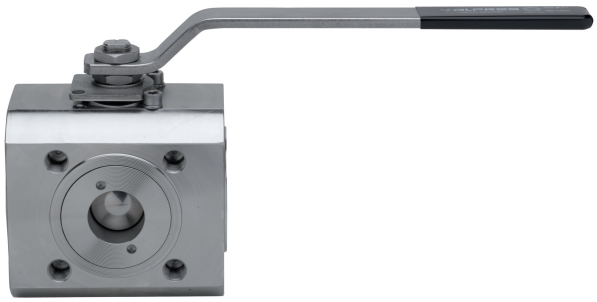

# 776401(L)-776400(T)

## STAINLESS STEEL

Full bore three way flanged PN16 diverter ball valve, stainless steel A479-Tp316, L multi port ball, with 4 seats.

option V-PACK

## Technical specifications

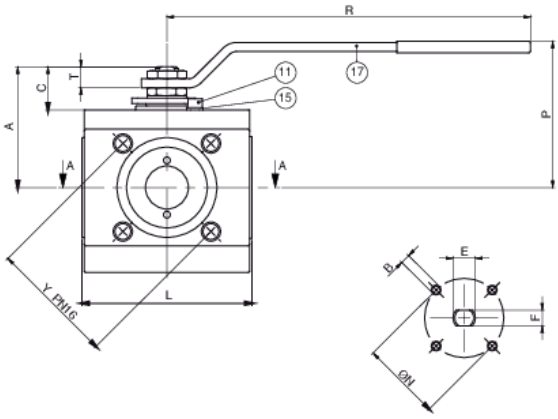


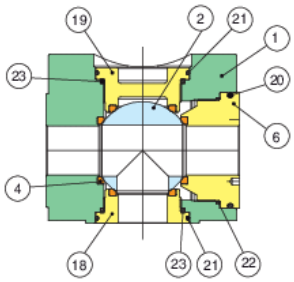


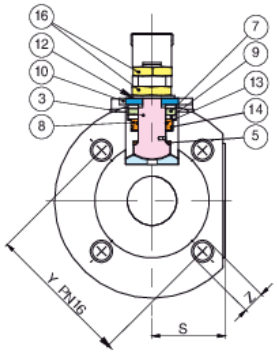


Stainless steel temperature range: -20°C +160°C.

Vacuum: $10^{-3}$ torr.

The DN80 and DN100 versions differ from the drawing shown.

| POSITION | PART NAME | MATERIAL | N.° PIECES |
|---|---|---|---|
| 1 | BODY | A479-TP316 | 1 |
| 2 | BALL | A479-TP316/A351-CF8M | 1 |
| 3 | STEM | A479-TP316 | 1 |
| 4 | BALL SEAT | PTFE | 4 |
| 5 | THRUST WASHER | PTFE | 1 |
| 6 | END CONNECTION | A479-TP316/316L | 1 |
| 7 | STEM SEAT | GRAPHOIL | 1 |
| 8 | STEM SEAT | PTFE | 1 |
| 9 | PACKING GLAND | A182-F316 | 2 |
| 10 | END STOP | A182-F316 | 1 |
| 11 | SCREW | STAINLESS STEEL | 2 |
| 12 | SPRING WASHER | A182-F304 | 2 |
| 13 | O-RING | FKM | 1 |
| 14 | O-RING | FKM | 1 |
| 15 | WASHER | STAINLESS STEEL | 2 |
| 16 | NUT | STAINLESS STEEL | 2 |
| 17 | HANDLE | A182-F316 | 1 |
| 18 | STEM RETAINING NUT | A479-316/316L | 1 |
| 19 | STEM RETAINING NUT | A479-316/316L | 1 |
| 20 | O-RING | FKM | 2 |
| 21 | O-RING | FKM | 1 |
| 22 | BODY SEAT | PTFE | 2 |
| 23 | BODY SEAT | PTFE | 1 |

| SIZE | DN | CODE | Y | Z | L | S | R | P | A | C | T | E | F | ØN | B | KV(L) | PN | KG |
|---|---|---|---|---|---|---|---|---|---|---|---|---|---|---|---|---|---|---|
| 1/2" | 15 | 77640104-77640004 | 65 | 4xM12 | 99 | 35 | 131,5 | 73 | 55 | 20 | 10 | M10 | 7 | 42 | 4xM5 | 7,6 | 16 | 3,70 |
| 3/4" | 20 | 77640105-77640005 | 75 | 4xM12 | 108 | 40 | 174 | 90 | 72 | 28 | 13 | M12 | 8 | 50 | 4xM6 | 12,2 | 16 | 5,50 |
| 1" | 25 | 77640106-77640006 | 85 | 4xM12 | 115 | 41,5 | 174 | 95 | 76 | 27 | 12 | M12 | 8 | 50 | 4xM6 | 21,1 | 16 | 7,00 |
| 1"1/4 | 32 | 77640107-77640007 | 100 | 4xM16 | 140 | 52,5 | 250 | 116 | 92 | 31 | 13 | M16 | 10 | 50 | 4xM6 | 34,6 | 16 | 12,50 |
| 1"1/2 | 40 | 77640108-77640008 | 110 | 4xM16 | 150 | 56,5 | 321 | 129 | 107 | 38 | 18,5 | M20 | 14 | 70 | 4xM8 | 48,8 | 16 | 16,50 |
| 2" | 50 | 77640110-77640010 | 125 | 4xM16 | 167 | 62 | 321 | 137 | 115 | 38 | 18,5 | M20 | 14 | 70 | 4xM8 | 85,1 | 16 | 22,50 |
| 2"1/2 | 65 | 77640112-77640012 | 145 | 4xM16 | 185 | 85 | 321 | 150 | 131 | 41 | 22,5 | M20 | 14 | 70 | 4xM8 | 138,4 | 16 | 37,00 |
| 3" | 80 | 77640114-77640014 | 160 | 8xM16 | 216 | 127 | 381 | 171 | 147 | 40 | 18 | M24 | 18 | 102 | 4xM10 | 220,1 | 16 | 60,00 |
| 4" | 100 | 77640118-77640018 | 180 | 8xM16 | 244 | 150 | 381 | 192 | 169 | 39 | 18 | M24 | 18 | 102 | 4xM10 | 381,1 | 16 | 95,00 |

# Certifications

TUV

ATEX

# Spare Parts

- HANDLES

| Code | Material | Size |
|---|---|---|
| RI2180 | AISI 316 | 15 |
| RI2181 | AISI 316 | 20 |
| RI2182 | AISI 316 | 32 |
| RI2183 | AISI 316 | 40 |
| RI2183 | AISI 316 | 50 |
| RI2183 | AISI 316 | 65 |
| RI2184 | AISI 316 | 80 |
| RI2184 | AISI 316 | 100 |

## SEATS

| Code | Material | Size |
|---|---|---|
| RI2652 | PTFE | 15 |
| RI2653 | PTFE | 20 |
| RI2637 | PTFE | 25 |
| RI2654 | PTFE | 32 |
| RI2638 | PTFE | 40 |
| RI2639 | PTFE | 50 |
| RI2640 | PTFE | 65 |
| RI2641 | PTFE | 80 |
| RI2642 | PTFE | 100 |

## BALL

| Code | Material | Size |
|---|---|---|
| 00304000067 | AISI 316 | 15 |
| 00305000062 | AISI 316 | 20 |
| 00306000065 | AISI 316 | 25 |
| 00307000066 | AISI 316 | 32 |
| 00308000063 | AISI 316 | 40 |
| 00310000087 | AISI 316 | 50 |
| 00312000029 | AISI 316 | 65 |
| 00314000039 | AISI 316 | 80 |
| 00318000008 | AISI 316 | 100 |
| 00304000066 | AISI 316 | 15 |
| 00305000061 | AISI 316 | 20 |
| 00306000062 | AISI 316 | 25 |
| 00307000058 | AISI 316 | 32 |
| 00308000064 | AISI 316 | 40 |
| 00310000085 | AISI 316 | 50 |
| 00312000031 | AISI 316 | 65 |
| 00314000010 | AISI 316 | 80 |
| 00318000025 | AISI 316 | 100 |

## STEMS ANTISTATIC DEVICE

| Code | Material | Size |
|---|---|---|
| 00404000033 | AISI 316 | 15 |
| 00406000020 | AISI 316 | 20 |
| 00406000020 | AISI 316 | 25 |
| 00408000023 | AISI 316 | 32 |
| 00410000024 | AISI 316 | 40 |
| 00410000024 | AISI 316 | 50 |
| 00412000015 | AISI 316 | 65 |
| 00414000003 | AISI 316 | 80 |
| 00414000003 | AISI 316 | 100 |