INTER-GAS



706400-706600-706800

Fully welded painted ASTM A105/WCB full bore floating ball valve for natural gas, elongated stem for installation underground level, BW ends, in accordance to UNI 9734 and EN 13774 with square for manual operator connector.

Technical specifications

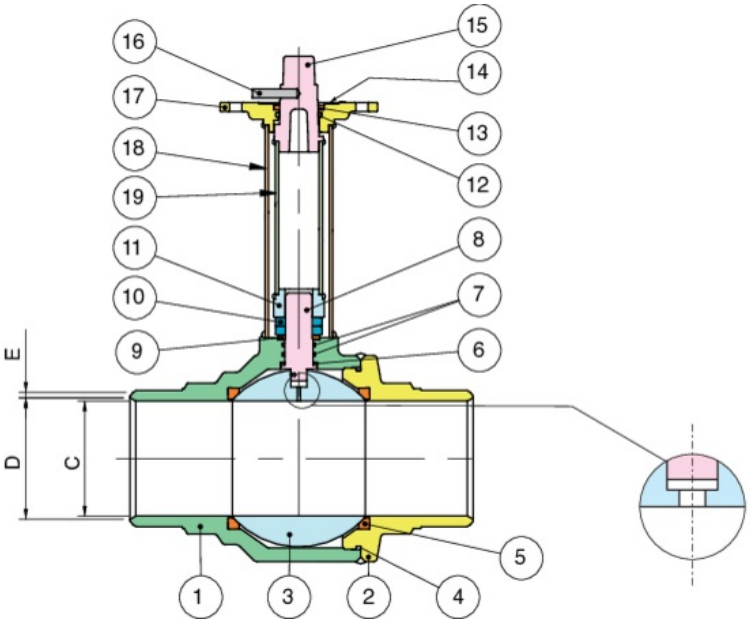

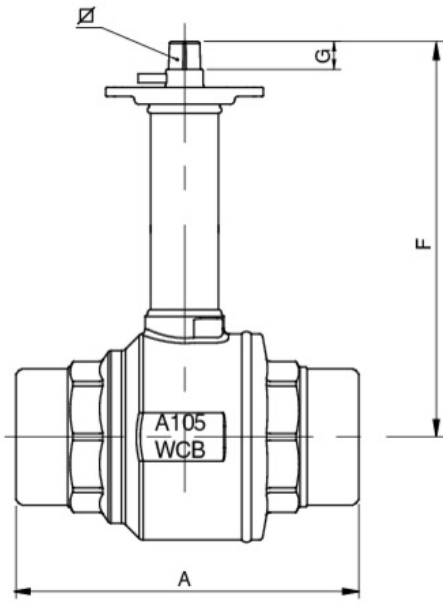

Temperature range: -10°C +60°C.

POSITION	PART NAME	MATERIAL	N.° PIECES
1	BODY	ASTM A105/WCB	1
2	END CONNECTION	ASTM A105/WCB	1
3	BALL	A479-TP304	1
4	O-RING	NBR	1
5	BALL SEAT	PTFE	2
6	SEAT	PTFE	1
7	O-RING	FKM	2
8	STEM	A479-TP304	1
9	PACKING GLAND	POM	1
10	NUT	CARBON STEEL	2
11	STEM TRASMISSION	ASTM A105	1
12	O-RING	FKM	1
13	SEAT	PTFE	1
14	LABEL	ALUMINIUM	1
15	OPERATION SQUARE	A216-WCB	1
16	OPEN/CLOSED INDICATION	CARBON STEEL	1
17	CAP	A216-WCB	1
18	EXTERNAL STEM EXTENSION	CARBON STEEL	1
19	INTERNAL STEM EXTENSION	CARBON STEEL	1

SIZE	DN	CODE	A	C	D	E	F 706400	F 706600	F 706800	G		KV	PN	KG (L=600)
1"	25	70640006-70660006-70680006	165	25	26,64	3,38	400	600	800	25	22x22	64,5	20	4,90
1"1/4	32	70640007-70660007-70680007	178	30	35,08	3,56	400	600	800	25	22x22	103,8	20	5,50
1"1/2	40	70640008-70660008-70680008	191	38	43,1	3,9	400	600	800	25	22x22	174	20	7,60
2"	50	70640010-70660010-70680010	216	50	54,5	4,3	400	600	800	25	22x22	301,3	20	9,50
2"1/2	65	70640012-70660012-70680012	241	64	69,3	4,35	400	600	800	25	22x22	545,7	20	15,30
3"	80	70640014-70660014-70680014	283	76	83,1	4,3	400	600	800	25	22x22	872,5	20	19,60
4"	100	70640018-70660018-70680018	305	102	107,9	4,8	400	600	800	25	22x22	1363,3	20	27,50
5"	125	70640019-70660019-70680019	380	125	131,5	5,4	400	600	800	25	22x22	2360,3	20	42,00
6"*	150	70640020-70660020-70680020	457	150	160	4,6	400	600	800	30	36x27	3671,1	20	77,00
8"*	200	70640021-70660021-70680021	521	200	209,1	7,5	400	600	800	30	36x27	6816,6	20	112,00

*Connection for gear operator.

Epoxy painting 100 micron thick.

N.B. Prices 706400 - 706800 on request.