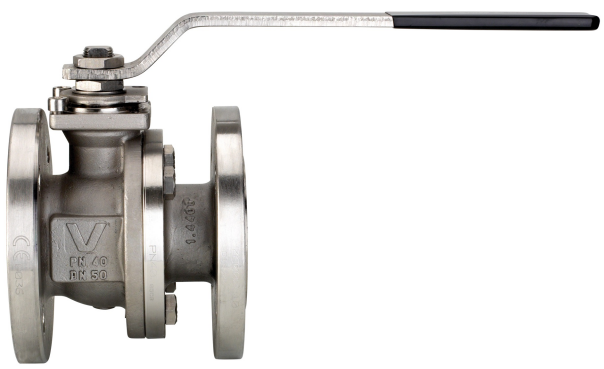

760V00

STAINLESS STEEL

Flanged PN16 stainless steel AISI 316-CF8M ball valve, full bore, EN 558 basic series 27 face to face dimension, Fire Safe, Antistatic Device.

Option available: A351-CF8M for solvents.





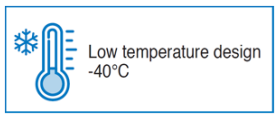

Technical specifications

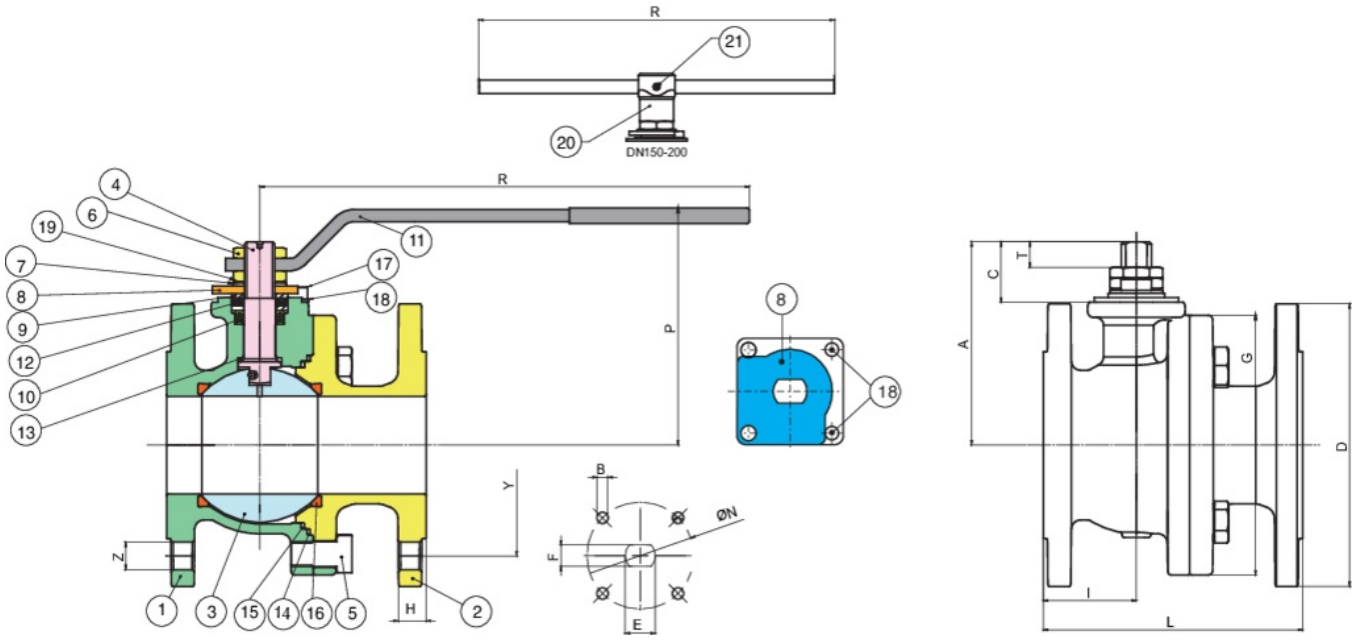

Temperature range: -40°C +180°C.

Vacuum: 10^{-2} torr.

POSITION	PART NAME	MATERIAL	N.° PIECES
1	BODY	A351-CF8M	1
2	END CONNECTION	A351-CF8M	1
3	BALL	A351-CF8M/A479-TP316	1
4	STEM	A479-TP316/17-4-PH	1
5	SCREW	A2-70	*4-8-12
6	NUT	A2-70	**2-1
7	SPRING WASHER	AISI 304	4
8	90° STOP	AISI 316	1
9	PACKING GLAND	A479-TP316	2
10	V-PACK	PTFE	1
11	HANDLE	AISI 316	1
12	STEM SEAL	GRAPHOIL	1
13	THRUST WASHER	PTFE	1
14	BODY SEAT	GRAPHOIL	1
15	BODY SEAT	PTFE	1
16	BALL SEAT	TFM-MPTFE	2
17	SCREW	A2-70	2
18	WASHER	AISI 304	2
19	UNSCREWING GROWER	AISI 316	1
20	BODY HANDLE DN150-200	EN GJL 250	1
21	SCREW	8.8 CS	2

*DN15-DN65=4 - DN80-125=8 - DN150-200=12

**DN15-DN125=2 - DN150-200=1

SIZE	DN	CODE	D	Y	Z	H	I	L	G	P	R	A	C	T	E	F	ØN	B	KV	PN	KG
1/2"	15	760V0004	95	65	4xØ14	16	49	115	71	88	131	52	19	8	M10x1,25	7	42-F04	M5	19,2	40	2,50
3/4"	20	760V0005	105	75	4xØ14	18	51	120	73,5	93	131	56	19	8	M10x1,25	7	42-F04	M5	35	40	3,20
1"	25	760V0006	115	85	4xØ14	18	54	125	90,5	89	174	72,5	27,5	13	M12x1,5	8	50-F05	M6	64,5	40	4,50
1"1/4	32	760V0007	140	100	4xØ18	18	55	130	97	93	174	76	27,5	13	M12x1,5	8	50-F05	M6	103,8	40	5,80
1"1/2	40	760V0008	150	110	4xØ18	18	51,5	140	114	133	250	107	30	10	M16x1,5	10	50-F05	M6	174	40	8,10
2"	50	760V0010	165	125	4xØ18	20	57,5	150	136,5	144	321	122	38,5	18	M20x1,5	14	70-F07	M8	301,3	40	11,40
2"1/2	65	760V0012	185	145	4xØ18	18	61	170	167,6	154	321	133	39,5	18	M20x1,5	14	70-F07	M8	545,7	16	15,40
3"	80	760V0014	200	160	8xØ18	20	75,5	180	178,6	173	381	151	43	18	M24x2	18	102-F10	M10	872,5	16	20,50
4"	100	760V0018	220	180	8xØ18	20	80	190	208,6	187	381	165	43	18	M24x2	18	102-F10	M10	1363,3	16	26,80
5"	125	760V0019	250	210	8xØ18	22	149	325	273	209	381	187	43	18	M24x2	18	102-F10	M10	2360,3	16	50,20
6"	150	760V0020	285	240	8xØ22	22	157	350	311	305	700	245	68	41	M42x3	30	125-F12	M12	3671,1	16	75,70
8"	200	760V0021	340	295	12xØ22	24	190	400	402	348	700	288	68	41	M42x3	30	125-F12	M12	6816,6	16	104,00

Certifications

TUV SIL 3

FIRE-SAFE Acc. EN ISO 10497/API 607

F.E. TESTED ISO15848-1

Spare Parts

- STEMS ANTISTATIC DEVICE

Code	Material	Size
00404000033	AISI 316	15
00404000033	AISI 316	20
00406000020	AISI 316	25
00406000020	AISI 316	32
00412000014	AISI 316	65

STEMS

Code	Material	Size
00408000022	AISI 316	40
00410000023	AISI 316	50

SEATS

Code	Material	Size
RI6612	TFM + V-PACK	15
RI6613	TFM + V-PACK	20
RI6436	TFM + V-PACK	25
RI6614	TFM + V-PACK	32
RI6615	TFM + V-PACK	40
RI6616	TFM + V-PACK	50
RI6617	TFM + V-PACK	65
RI6618	TFM + V-PACK	80
RI6463	TFM + V-PACK	100
RI6619	TFM + V-PACK	125
RI6620	TFM + V-PACK	150
RI6621	TFM + V-PACK	200