700355 C1-C2-C3

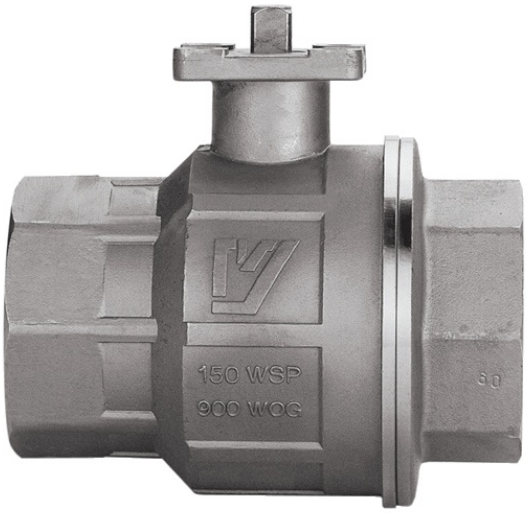

Full bore stainless steel AISI 316-CF8M ball valve equipped with V-Ball for pressure and flow regulation, F/F threading, ISO 5211 direct mount pad, Antistatic Device.

V-Ball option



Technical specifications

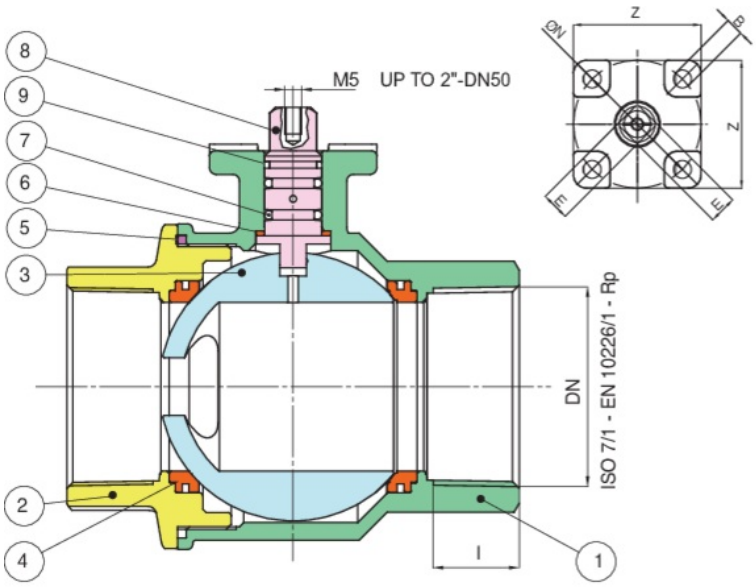

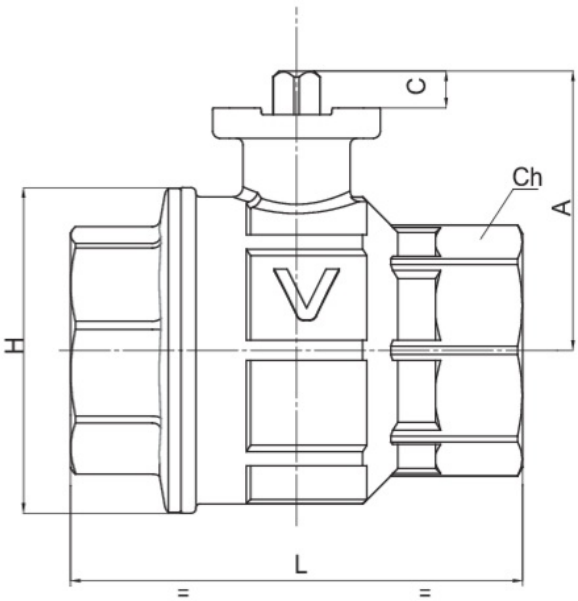

Temperature range: -20°C +160°C.

POSITION	PART NAME	MATERIAL	N.° PIECES
1	BODY	A351-CF8M	1
2	END CONNECTION	A351-CF8M	1
3	BALL	A479-TP316/A351-CF8M	1
4	BALL SEAT	RPTFE	2
5	BODY SEAT	PTFE	1
6	ANTIFRICTION RING	TFM-MPTFE	1
7	O-RING	FKM	2
8	STEM	A479-TP316/17-4-PH	1
9	STEM SEAT	PTFE	1

SIZE	DN	CODE	BOX	I	L	H	CH	A	C	E	ØN	B	Z	PN	KG
1/2"	15	70035502	10	15	67	34,5	27	41,5	9	9	36-F03	6	38	64	0,32
3/4"	20	70035505	6	16,3	78	42	32	43,5	9	9	36-F03	6	38	64	0,42
1"	25	70035506	5	19,1	90	51,5	41	53,5	9	9	36-F03	6	38	64	0,30
1"1/4	32	70035507	2	21,4	100	64,5	50	57	9	9	36-F03	6	38	64	1,08
1"1/2	40	70035508	2	21,4	112	77	55	74	11	11	50-F05	7	50	64	1,72
2"	50	70035510	3	25,7	135	97	70	83,3	11	11	50-F05	7	50	64	3,00
2"1/2	65	70035512	1	30,2	160	124	87	111	15,5	14	70-F07	9	64	25	6,06
3"	80	70035514	1	33,3	180	145	105	120	17,5	114/17	70-F07	9	64	25	9,56

Certifications

ATEX

SIL 3

F.E. TESTED ISO15848-1

T.A.LUFT